PFS Remediation -Final Verification Sampling

Data Package 1

COC #	SDG#	Sample Description	Sample Number	Location #
6324	21511	West overburden (composite) w/ asphalt cover	075-001000203-36	O1
6324	21511	QA duplicates	BD-1	
6324	21511	East overburden (composite) wo/asphalt cover	075-002000203-36	O2

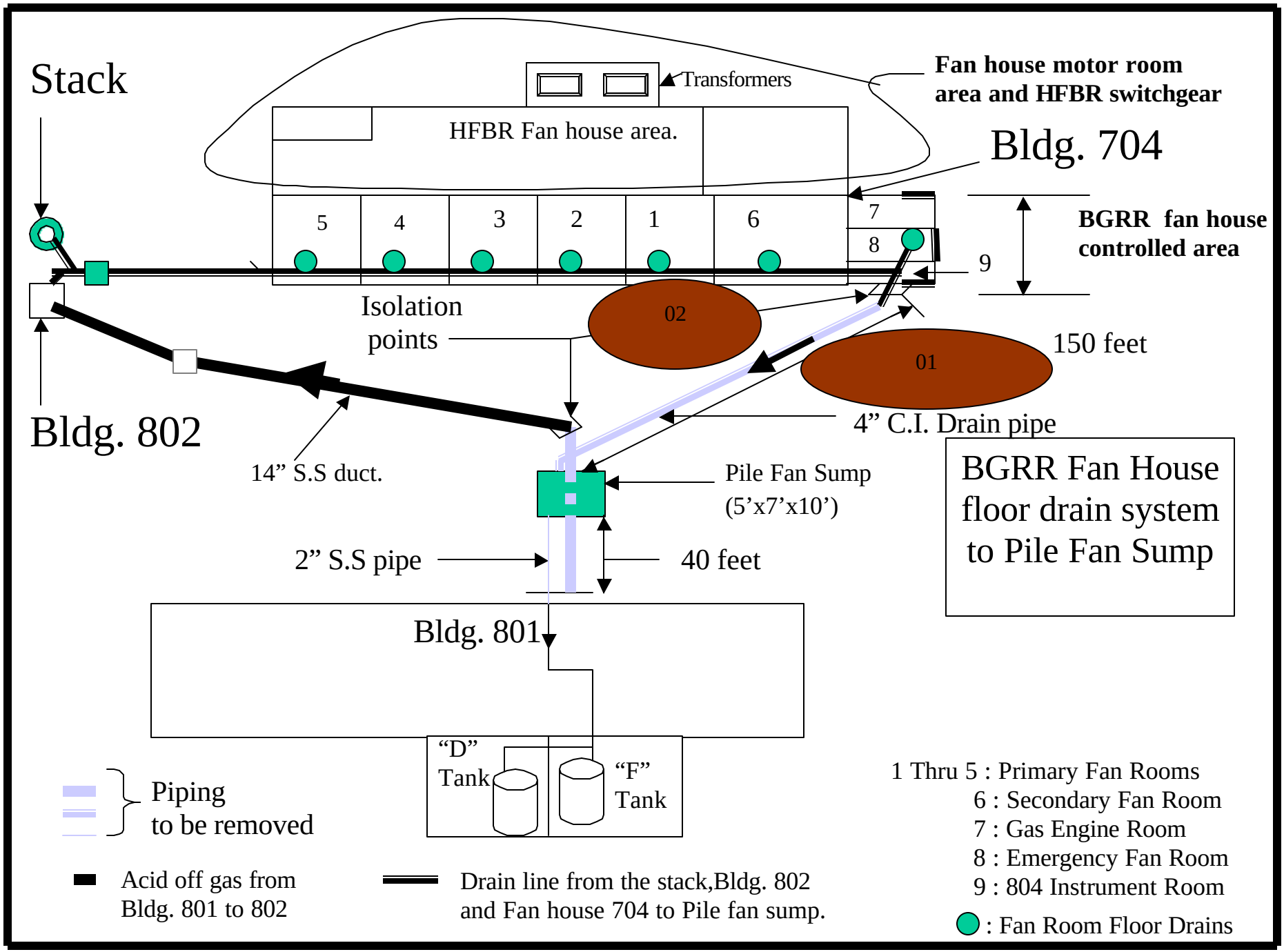

Data Package 1 Over Burden Relative Sample Locations O1 – O2

GENERAL ENGINEERING LABORATORIES

Meeting today's needs with a vision for tomorrow.

March 29, 2000

Anna Bou
Brookhaven National Laboratory
Building 51M
Upton, NY 11973

(631) 344-5140

Re: Project – BGRR-PFS
Chain of Custody – 6324
Project Manager – S. Springle
Account # - 07314
Release # - 21511 : RAD, PAH, PEST/PCB

Dear Ms. Bou:

I am sending you the data package for the analysis of samples from BGRR-PFS Project at Brookhaven National Laboratory. General Engineering Laboratories appreciates this opportunity to provide you with analytical results and trusts that you will find everything in order and to your satisfaction. If you have any questions, please do not hesitate in contacting me at (843) 556-8171.

Yours very truly,

Nancy A. Slater
Project Manager

enclosure

P O Box 30712 • Charleston, SC 29417 • 2040 Savage Road • 29407
(843) 556-8171 • Fax (843) 766-1178

Printed on recycled paper.

2

21511

ASL Prefix No.

DQL

BROOKHAVEN NATIONAL LABORATORY

Page 1 of 1

Chain of Custody No. 6324

SAMPLING CHAIN OF CUSTODY

Carrier/Waybill #

ASL Analysis Requested By	Sampling Contractor	Analytical Laboratory
Name: Clyde Newson	Name: ESD Field Team	Name: GEL
Life No: ~~0001NWA~~ Ext: 2646	Address:	Address:
Acct. No: 07314 Dept: ERD	City: St: Zip:	City: Charleston St: SC Zip:
Email Reports To:	Contact: Richard Lagattolla	Contact:
1 C. Newson	Phone: 344-7129	Phone:
2 S. Musolino	Email / Fax: 344-4191	Email / Fax:
Project Name:	Project Manager:	Field Engineer:
BGRR-PFS-	S. Springle	S. Springle

Comments:
* Analysis Methods as per attached.

ASL SEQ. UID	SFX	Site ID	Depth	Date	Time	Matrix	Location Description --->	Cont Volume	Cont Type	N of Cont	Preservative	Alpha/Beta	Tritium	Gamma	Strontium	524.2	624	Pesticides	PAHs	Sr, TC-99, C-14, Ni-63, Th-232, Ra-226, I-129, Am-241	U-234/5/8, Pu-238/9/40	PCBs
1 001		075-001000203-36	2'	2/3/00	1047	S	West Overburden	8oz	AG	1	—								X			
001		075-001000203-36	2'	2/3/00	1047	S	Soil Pile Composite (w Asphalt Cover)	8oz	AG	1	—	X	X	X	X					X	X	X	
2 002		BD-1	2'	2/3/00	1050	S	Soil	8oz	AG	1	—								X			
002		I-D-1	2'	2/3/00	1050	S	Soil	8oz	AG	1	—	X	X	X	X					X	X	X	
003		075-002000203-36	2'	2/3/00	1118	S	East Overburden	8oz	AG	1	—							X				
3 003		075-002000203-36	2'	2/3/00	1118	S	Soil Pile w/out Asphalt Cover Composite	8oz	AG	1	—	X	X	X	X					X	X	X	
4 004		075-003000203-30	0	2/3/00	1134	AS	Grab from Asphalt	8oz	AG	1	—											X

1 Relinquished By / Date / Time	2 Relinquished By / Date / Time	3 Relinquished By / Date / Time
Print: R. Lagattolla	Print:	Print:
Signature: Richard Lagattolla 2/4/00 0930	Signature:	Signature:
1 Received By / Date / Time	2 Received By / Date / Time	3 Received By / Date / Time
Print: Franco 2/4/00 0930	Print:	Print:
Signature: 2/5/00	Signature:	Signature:

Contractor Lab Sample Disposal:
- ☐ Return To Client
- ☐ Disposal By Lab
- ☐ Archive For ____ Months

Turn-Around Time Required:
- ☐ RUSH (1 Day)
- ☐ 14 Days
- ☐ 30 Days
- ☐ 7 Days
- ☐ Other ( )

BNL F3101

Distribution: WHITE - Stays with Sample; PINK - Field Copy (Sampler); GOLDENROD - Returned to Client with Report

*SW846 methodology acceptable as per S. Springle. NAS 2/10/00

1B
SEMIVOLATILE ORGANICS ANALYSIS DATA SHEET

EPA SAMPLE NO.

075-0010
00203-36

Lab Name: GENERAL ENGINEERING LABOR Contract: N/A

Lab Code: N/A Case No.: N/A SAS No.: N/A SDG No.: 21511

Matrix: (soil/water) SOIL Lab Sample ID: 21511001

Sample wt/vol: 30.0 (g/mL) G Lab File ID: 4H314

Level: (low/med) LOW Date Received: 02/05/00

% Moisture: 15 decanted: (Y/N) N Date Extracted: 02/16/00

Concentrated Extract Volume: 1.00 (mL) Date Analyzed: 02/17/00

Injection Volume: 1.0 (uL) Dilution Factor: 1.0

GPC Cleanup: (Y/N) N pH: 7.0

CAS NO.	COMPOUND	CONCENTRATION UNITS: (ug/L or ug/Kg) UG/KG	Q
91-20-3	Naphthalene	39.4	U
208-96-8	Acenaphthylene	39.4	U
83-32-9	Acenaphthene	39.4	U
86-73-7	Fluorene	39.4	U
85-01-8	Phenanthrene	196	
120-12-7	Anthracene	55.2	
206-44-0	Fluoranthene	494	
129-00-0	Pyrene	436	
56-55-3	Benzo(a)anthracene	218	
218-01-9	Chrysene	239	
205-99-2	Benzo(b)fluoranthene	236	
207-08-9	Benzo(k)fluoranthene	196	
50-32-8	Benzo(a)pyrene	226	
193-39-5	Indeno(1,2,3-cd)pyrene	93.9	
53-70-3	Dibenz(a,h)anthracene	39.4	U
191-24-2	Benzo(g,h,i)perylene	103	

1D
PESTICIDE ORGANICS ANALYSIS DATA SHEET

EPA SAMPLE NO.

075-0020
00203-36

Lab Name: GENERAL ENGINEERING LABOR Contract: N/A

Lab Code: N/A Case No.: N/A SAS No.: N/A SDG No.: 21511

Matrix: (soil/water) SOIL Lab Sample ID: 21511003

Sample wt/vol: 30.0 (g/mL) G Lab File ID: 055B5501

% Moisture: 5 decanted: (Y/N) N Date Received: 02/05/00

Extraction: (SepF/Cont/Sonc) SONC Date Extracted: 02/17/00

Concentrated Extract Volume: 5.00(mL) Date Analyzed: 02/23/00

Injection Volume: 1.0(uL) Dilution Factor: 1.0

GPC Cleanup: (Y/N) N pH: 7.0 Sulfur Cleanup: (Y/N) N

CAS NO.	COMPOUND	CONCENTRATION UNITS: (ug/L or ug/Kg) UG/KG	Q
319-84-6	alpha-BHC	0.70	U
319-85-7	beta-BHC	0.70	U
319-86-8	delta-BHC	0.70	U
58-89-9	gamma-BHC (Lindane)	0.70	U
76-44-8	Heptachlor	0.70	U
309-00-2	Aldrin	0.70	U
1024-57-3	Heptachlor epoxide	0.70	U
53494-70-5	Endrin ketone	1.4	U
959-98-8	Endosulfan I	0.70	U
60-57-1	Dieldrin	1.4	U
72-55-9	4,4'-DDE	1.4	U
72-20-8	Endrin	1.4	U
33213-65-9	Endosulfan II	1.4	U
72-54-8	4,4'-DDD	1.4	U
1031-07-8	Endosulfan sulfate	1.4	U
50-29-3	4,4'-DDT	1.4	U
72-43-5	Methoxychlor	7.0	U
7421-93-4	Endrin aldehyde	1.4	U
8001-35-2	Toxaphene	35.1	U
12674-11-2	Aroclor-1016	17.5	U
11104-28-2	Aroclor-1221	17.5	U
11141-16-5	Aroclor-1232	17.5	U
53469-21-9	Aroclor-1242	17.5	U
12672-29-6	Aroclor-1248	17.5	U
11097-69-1	Aroclor-1254	17.5	U
11096-82-5	Aroclor-1260	17.5	U
57-74-9	Chlordane (tech.)	8.8	U

1D
PESTICIDE ORGANICS ANALYSIS DATA SHEET

EPA SAMPLE NO.

075-0030
00203-30

Lab Name: GENERAL ENGINEERING LABOR Contract: N/A

Lab Code: N/A Case No.: N/A SAS No.: N/A SDG No.: 21511

Matrix: (soil/water) SOIL Lab Sample ID: 21511004

Sample wt/vol: 1.0 (g/mL) G Lab File ID: 017B1701

% Moisture: 0 decanted: (Y/N) N Date Received: 02/05/00

Extraction: (SepF/Cont/Sonc) SONC Date Extracted: 02/16/00

Concentrated Extract Volume: 1.00 (mL) Date Analyzed: 02/18/00

Injection Volume: 1.0 (uL) Dilution Factor: 1.0

GPC Cleanup: (Y/N) N pH: 7.0 Sulfur Cleanup: (Y/N) N

CAS NO.	COMPOUND	CONCENTRATION UNITS: (ug/L or ug/Kg) UG/KG	Q
12674-11-2	Aroclor-1016	100	U
11104-28-2	Aroclor-1221	100	U
11141-16-5	Aroclor-1232	100	U
53469-21-9	Aroclor-1242	100	U
12672-29-6	Aroclor-1248	100	U
11097-69-1	Aroclor-1254	100	U
11096-82-5	Aroclor-1260	100	U

FORM I PEST OLM03.0

GENERAL ENGINEERING LABORATORIES

Meeting today's needs with a vision for tomorrow.

Certificate of Analysis

Company : Brookhaven National Laboratory
Address : OER
Building 51M
Upton, NY 11973-5000
Contact: Ms. Anna Bou
Project: Routine Analytical

Report Date: March 29, 2000

Client Sample ID: 075-001000203-36
Sample ID: 21511001
Matrix: Soil
Collect Date: 03-FEB-00
Receive Date: 05-FEB-00
Collector: Client
Moisture: 15.4%

Project: BRKL00297
Client ID: BRKL001

Parameter	Qualifier	Result		DL	RL	Units	DF	Analyst	Date	Time	Batch	Method
Rad Alpha Spec												
Alphaspec Am241, Cm, solid												
Americium-241	U	0.0227	+/-0.0481	0.0991	1	pCi/g	1	JAL	03/01/00	2231	12552	1
Alphaspec Pu, solid												
Plutonium-238	UJ-K	-0.00502	+/-0.0483	0.117	6.6	pCi/g	1	JAL	03/02/00	2218	12554	2
Plutonium-239/240	U	0.00059	+/-0.0252	0.0697	4	pCi/g	1					
Alphaspec Th, solid												
Thorium-228		0.416	+/-0.201	0.260	1	pCi/g	1	JAL	03/03/00	0747	12558	3
Thorium-230		0.294	+/-0.146	0.139	1	pCi/g	1					
Thorium-232		0.328	+/-0.150	0.0979	1	pCi/g	1					
Alphaspec U, solid												
Uranium-233/234		0.147	+/-0.0803	0.0315	.9	pCi/g	1	JAL	03/02/00	2232	12555	4
Uranium-235/236	UJ-K	0.00	+/-0.00	0.0316	.9	pCi/g	1					
Uranium-238		0.231	+/-0.102	0.0315	.9	pCi/g	1					
Rad Gamma Spec												
Gamma I129, solid												
Iodine-129	UJ	0.163	+/-0.154	0.258	1	pCi/g	1	SRB	03/02/00	1220	11821	5
Gammaspec, Gamma, solid												
Americium-241	UJ-K	0.0145	+/-0.0162	0.0279	4	pCi/g	1	SRB	03/04/00	1552	12443	6
Beryllium-7	U	-0.024	+/-0.141	0.224	1	pCi/g	1					
Cesium-134	UJ-K	-0.000997	+/-0.0132	0.0203	.1	pCi/g	1					
Cesium-137	UJ-K	0.020	+/-0.0196	0.024	2.3	pCi/g	1					
Cobalt-57	UJ-K	-0.00146	+/-0.00617	0.0117	.1	pCi/g	1					
Cobalt-60	UJ-K	-0.00388	+/-0.0135	0.023	.1	pCi/g	1					
Europium-152	U	0.00724	+/-0.0304	0.0535	4.8	pCi/g	1					
Europium-154	U	0.0199	+/-0.038	0.0684	17	pCi/g	1					
Europium-155	UJ-K	0.014	+/-0.0239	0.0468	.2	pCi/g	1					
Manganese-54	U	0.00553	+/-0.0125	0.0231	.1	pCi/g	1					
Radium-226	UJ-	0.242	+/-0.0664	0.0415	1	pCi/g	1					

P O Box 30712 •Charleston, SC 29417 •2040 Savage Road •29407
(843) 556-8171 •Fax (843) 766-1178

GENERAL ENGINEERING LABORATORIES

Meeting today's needs with a vision for tomorrow.

Certificate of Analysis

Company: Brookhaven National Laboratory
Address: OER
Building 51M
Upton, NY 11973-5000
Contact: Ms. Anna Bou
Project: Routine Analytical

Report Date: March 29, 2000

Client Sample ID: 075-001000203-36
Sample ID: 21511001

Project: BRKL00297
Client ID: BRKL001

Parameter	Qualifier	Result		DL	RL	Units	DF	AnalystDate	Time	Batch	Method
Rad Gamma Spec											
Gammaspec, Gamma, solid											
Sodium-22	B U	0.00724	+/-0.0137	0.0247	.7	pCi/g	1				
Vanadium-48	UJ-K	-0.0206	+/-0.0467	0.0814	1	pCi/g	1				
Zinc-65	U	-0.00772	+/-0.0335	0.0502	.2	pCi/g	1				
Rad Gas Flow											
GFPC, Gross A/B, solid											
Alpha		3.19	+/-0.681	0.739	1	pCi/g	1	TMC 03/03/00	0341	11565	7
Beta		5.57	+/-0.726	0.951	1	pCi/g	1				
GFPC, Sr90, solid											
Strontium-90	U	0.334	+/-0.760	1.73	7.5	pCi/g	1	AAK 02/23/00	1716	11639	8
Rad Liquid Scint											
LSC, Tritium Dist, solid											
Tritium	U	1.86	+/-2.52	4.25	6	pCi/g	1	FDP 02/19/00	1430	12469	9
Liquid Scint C14, solid											
Carbon-14	U	0.0583	+/-0.123	0.209	1	pCi/g	1	KDA 03/16/00	0656	12078	10
Liquid Scint Ni63, solid											
Nickel-63	UJ-K	-0.417	+/-0.593	1.42	2	pCi/g	1	AEA 03/18/00	0947	11946	11
Liquid Scint Tc99, solid											
Technetium-99	UJ-K	-0.231	+/-0.220	0.599	5	pCi/g	1	AEA 02/21/00	1601	11952	12

The following Prep Methods were performed

Method	Description	Analyst	Date	Time	Prep Batch
Ash Soil Prep	Ash Soil Prep EPI A-021,A-021B,A-026	CRS	02/10/00	1423	11205
Dry Soil Prep	Dry Soil Prep EPI A-021,A-021B,A-026	CRS	02/09/00	1206	10932
SW846 3550B	3550B BNA Soil Prep-8270C Analysis Fed	JMA	02/16/00	1745	11836

The following Analytical Methods were performed

Method	Description
1	DOE EML HASL 300
2	DOE EML HASL 300
3	DOE EML HASL 300
4	DOE EML HASL 300
5	LANL EM-9

P O Box 30712 • Charleston, SC 29417 • 2040 Savage Road • 29407
(843) 556-8171 • Fax (843) 766-1178

GENERAL ENGINEERING LABORATORIES

Meeting today's needs with a vision for tomorrow.

Certificate of Analysis

Company : Brookhaven National Laboratory
Address : OER
Building 51M
Upton, NY 11973-5000
Contact: Ms. Anna Bou
Project: Routine Analytical

Report Date: March 29, 2000

Client Sample ID: 075-001000203-36
Sample ID: 21511001

Project: BRKL00297
Client ID: BRKL001

Parameter	Qualifier	Result	DL	RL	Units	DF	AnalystDate	Time	Batch	Method
6	DOE EML HASL 300									
7	EPA 900									
8	EPA 905.0									
9	EPA 906.0									
10	EPA 504.1									
11	DOE RESL Ni-1									
12	DOE EML HASL 300									

Notes:
The Qualifiers in this report are defined as follows :

DL Failed required detection limit.
RI Not quantified due to interference.
U Sample result < .5*MDA and MDA <= RDL.
UJ .5*MDA < Sample result < MDA and MDA <= RDL.
UJ-Q Not quantified due to low abundance.

The above sample is reported on a dry weight basis.
This data report has been prepared and reviewed in accordance with General Engineering Laboratories, Inc. standard operating procedures. Please direct any questions to your Project Manager, Nancy Slater at 843-556-8171 Ext. 4438.

Wanda C Jenrees

Reviewed by

P O Box 30712 •Charleston, SC 29417 •2040 Savage Road •29407
(843) 556-8171 •Fax (843) 766-1178

GENERAL ENGINEERING LABORATORIES

Meeting today's needs with a vision for tomorrow.

Certificate of Analysis

Company : Brookhaven National Laboratory
Address : OER
Building 51M
Upton, NY 11973-5000
Contact: Ms. Anna Bou
Project: Routine Analytical

Report Date: March 29, 2000

Client Sample ID: BD-1
Sample ID: 21511002
Matrix: Soil
Collect Date: 03-FEB-00
Receive Date: 05-FEB-00
Collector: Client

Project: BRKL00297
Client ID: BRKL001

Parameter	Qualifier	Result		DL	RL	Units	DF	Analyst	Date	Time	Batch	Method
Rad Alpha Spec												
Alphaspec Am241, Cm, solid												
Americium-241	U	-0.0141	+/-0.0481	0.135	1	pCi/g	1	JAL	03/01/00	2231	12552	1
Alphaspec Pu, solid												
Plutonium-238	UJ-K	0.043	+/-0.0697	0.136	6.6	pCi/g	1	JAL	03/02/00	2218	12554	2
Plutonium-239/240	U	0.0123	+/-0.0371	0.0893	4	pCi/g	1					
Alphaspec Th, solid												
Thorium-228		0.243	+/-0.142	0.188	1	pCi/g	1	JAL	03/03/00	0759	12558	3
Thorium-230		0.149	+/-0.0986	0.111	1	pCi/g	1					
Thorium-232		0.217	+/-0.118	0.105	1	pCi/g	1					
Alphaspec U, solid												
Uranium-233/234	UJ	0.116	+/-0.0953	0.131	.9	pCi/g	1	JAL	03/02/00	2232	12555	4
Uranium-235/236	UJ-K	0.0154	+/-0.0308	0.0461	.9	pCi/g	1					
Uranium-238	UJ	0.0864	+/-0.0764	0.0887	.9	pCi/g	1					
Rad Gamma Spec												
Gamma I129, solid												
Iodine-129	U	-0.0037	+/-0.150	0.204	1	pCi/g	1	SRB	03/02/00	1409	11821	5
Gammaspec, Gamma, solid												
Americium-241	UJ-K	0.00478	+/-0.0179	0.0326	4	pCi/g	1	SRB	03/04/00	1553	12443	6
Beryllium-7	U	-0.00351	+/-0.0746	0.135	1	pCi/g	1					
Cesium-134	UJ-K	0.00647	+/-0.00896	0.0138	.1	pCi/g	1					
Cesium-137		0.0388	+/-0.0153	0.0136	2.3	pCi/g	1					
Cobalt-57	UJ-K	0.00587	+/-0.00783	0.00902	.1	pCi/g	1					
Cobalt-60	UJ-K	-0.00162	+/-0.00801	0.0139	.1	pCi/g	1					
Europium-152	U	-0.0227	+/-0.0191	0.0329	4.8	pCi/g	1					
Europium-154	U	-0.00577	+/-0.0242	0.042	17	pCi/g	1					
Europium-155	UJ-K	0.00	+/-0.028	0.035	.2	pCi/g	1					
Manganese-54	U	-0.00483	+/-0.00791	0.0134	.1	pCi/g	1					
Radium-226	UJ-B	0.181	+/-0.044	0.0237	1	pCi/g	1					
Sodium-22	U	-0.00205	+/-0.00875	0.0152	.7	pCi/g	1					
Vanadium-48	UJ-	0.00665	+/-0.0289	0.0515	1	pCi/g	1					

P O Box 30712 •Charleston, SC 29417 •2040 Savage Road •29407
(843) 556-8171 •Fax (843) 766-1178

GENERAL ENGINEERING LABORATORIES

Meeting today's needs with a vision for tomorrow.

Certificate of Analysis

Company : Brookhaven National Laboratory
Address : OER
Building 51M
Upton, NY 11973-5000
Contact: Ms. Anna Bou
Project: Routine Analytical

Report Date: March 29, 2000

Client Sample ID: BD-1
Sample ID: 21511002

Project: BRKL00297
Client ID: BRKL001

Parameter	Qualifier	Result		DL	RL	Units	DF	Analyst	Date	Time	Batch	Method
Rad Gamma Spec												
Gammaspec, Gamma, solid												
Zinc-65	K UJ	0.0316	+/-0.0226	0.0358	.2	pCi/g	1					
Rad Gas Flow												
GFPC, Gross A/B, solid												
Alpha		2.51	+/-0.760	0.950	1	pCi/g	1	TMC	03/03/00	0341	11565	7
Beta		3.57	+/-0.719	1.07	1	pCi/g	1					
GFPC, Sr90, solid												
Strontium-90	U	0.248	+/-0.568	1.29	7.5	pCi/g	1	AAK	02/23/00	1716	11639	8
Rad Liquid Scint												
LSC, Tritium Dist, solid												
Tritium	U	-0.339	+/-2.32	4.11	6	pCi/g	1	FDP	02/19/00	1502	12469	9
Liquid Scint C14, solid												
Carbon-14	U	0.0559	+/-0.124	0.211	1	pCi/g	1	KDA	03/16/00	0728	12078	10
Liquid Scint Ni63, solid												
Nickel-63	UJ-K	0.172	+/-0.649	1.55	2	pCi/g	1	AEA	03/18/00	1901	11946	11
Liquid Scint Tc99, solid												
Technetium-99	UJ-K	-0.368	+/-0.252	0.714	5	pCi/g	1	AEA	02/21/00	1633	11952	12

The following Prep Methods were performed

Method	Description	Analyst	Date	Time	Prep Batch
Ash Soil Prep	Ash Soil Prep EPI A-021,A-021B,A-026	CRS	02/10/00	1423	11205
Dry Soil Prep	Dry Soil Prep EPI A-021,A-021B,A-026	CRS	02/09/00	1206	10932

The following Analytical Methods were performed

Method	Description
1	DOE EML HASL 300
2	DOE EML HASL 300
3	DOE EML HASL 300
4	DOE EML HASL 300
5	LANL EM-9
6	DOE EML HASL 300
7	EPA 900
8	EPA 905.0
9	EPA 906.0

P O Box 30712 •Charleston, SC 29417 •2040 Savage Road •29407

GENERAL ENGINEERING LABORATORIES

Meeting today's needs with a vision for tomorrow.

Certificate of Analysis

Company : Brookhaven National Laboratory
Address : OER
Building 51M
Upton, NY 11973-5000
Contact: Ms. Anna Bou
Project: Routine Analytical

Report Date: March 29, 2000

Client Sample ID: BD-1
Sample ID: 21511002

Project: BRKL00297
Client ID: BRKL001

Parameter	Qualifier	Result	DL	RL	Units	DF	AnalystDate	Time	Batch	Method
10	EPA 504.1									
11	DOE RESL Ni-1									
12	DOE EML HASL 300									

Notes:
The Qualifiers in this report are defined as follows :

DL Failed required detection limit.
RI Not quantified due to interference.
U Sample result < .5*MDA and MDA <= RDL.
UJ .5*MDA < Sample result < MDA and MDA <= RDL.
UJ-Q Not quantified due to low abundance.

The above sample is reported on an "as received" basis.

This data report has been prepared and reviewed in accordance with General Engineering Laboratories, Inc. standard operating procedures. Please direct any questions to your Project Manager, Nancy Slater at 843-556-8171 Ext. 4438.

Wanda C Jennes
Reviewed by

GENERAL ENGINEERING LABORATORIES

Meeting today's needs with a vision for tomorrow.

Certificate of Analysis

Company : Brookhaven National Laboratory
Address : OER
Building 51M
Upton, NY 11973-5000
Contact: Ms. Anna Bou
Project: Routine Analytical

Report Date: March 29, 2000

Client Sample ID: 075-002000203-36
Sample ID: 21511003
Matrix: Soil
Collect Date: 03-FEB-00
Receive Date: 05-FEB-00
Collector: Client
Moisture: 4.96%

Project: BRKL00297
Client ID: BRKL001

Parameter	Qualifier	Result		DL	RL	Units	DF	Analyst	Date	Time	Batch	Method
Rad Alpha Spec												
Alphaspec Am241, Cm, solid												
Americium-241	U	0.0776	+/-0.0917	0.165	1	pCi/g	1	JAL	03/01/00	2231	12552	1
Alphaspec Pu, solid												
Plutonium-238	UJ-K	-0.00789	+/-0.0859	0.205	6.6	pCi/g	1	JAL	03/02/00	2218	12554	2
Plutonium-239/240	U	0.0069	+/-0.0404	0.106	4	pCi/g	1					
Alphaspec Th, solid												
Thorium-228		0.398	+/-0.190	0.233	1	pCi/g	1	JAL	03/03/00	0747	12558	3
Thorium-230		0.147	+/-0.101	0.119	1	pCi/g	1					
Thorium-232		0.341	+/-0.152	0.0864	1	pCi/g	1					
Alphaspec U, solid												
Uranium-233/234		0.161	+/-0.114	0.146	.9	pCi/g	1	JAL	03/02/00	2232	12555	4
Uranium-235/236	UJ-K	-0.0114	+/-0.0162	0.110	.9	pCi/g	1					
Uranium-238		0.152	+/-0.102	0.0915	.9	pCi/g	1					
Rad Gamma Spec												
Gamma I129, solid												
Iodine-129	U	0.0064	+/-0.263	0.257	1	pCi/g	1	SRB	03/02/00	1600	11821	5
Gammaspec, Gamma, solid												
Americium-241	UJ-K	0.00386	+/-0.0163	0.0292	4	pCi/g	1	SRB	03/05/00	0905	12443	6
Beryllium-7	U	-0.00646	+/-0.138	0.248	1	pCi/g	1					
Cesium-134	UJ-K	0.00918	+/-0.0138	0.022	.1	pCi/g	1					
Cesium-137	UJ-K	0.0128	+/-0.0147	0.0264	2.3	pCi/g	1					
Cobalt-57	UJ-K	0.00637	+/-0.00674	0.0129	.1	pCi/g	1					
Cobalt-60	UJ-K	0.00668	+/-0.0147	0.0263	.1	pCi/g	1					
Europium-152	U	-0.0023	+/-0.0338	0.0578	4.8	pCi/g	1					
Europium-154	U	-0.0125	+/-0.0495	0.0722	17	pCi/g	1					
Europium-155	UJ-K	0.0453	+/-0.0268	0.0517	.2	pCi/g	1					
Manganese-54	U	0.000348	+/-0.0144	0.026	.1	pCi/g	1					
Radium-226		0.274	+/-0.0771	0.0441	1	pCi/g	1					
Sodium-22	U	-0.00482	+/-0.0178	0.026	.7	pCi/g	1					

P O Box 30712 •Charleston, SC 29417 •2040 Savage Road •29407
(843) 556-8171 •Fax (843) 766-1178

GENERAL ENGINEERING LABORATORIES

Meeting today's needs with a vision for tomorrow.

Certificate of Analysis

Company : Brookhaven National Laboratory
Address : OER
Building 51M
Upton, NY 11973-5000
Contact: Ms. Anna Bou
Project: Routine Analytical

Report Date: March 29, 2000

Client Sample ID: 075-002000203-36
Sample ID: 21511003

Project: BRKL00297
Client ID: BRKL001

Parameter	Qualifier	Result		DL	RL	Units	DF	Analyst	Date	Time	Batch	Method
Rad Gamma Spec												
Gammaspec, Gamma, solid												
Vanadium-48	UJ-K	-0.00684	+/-0.0515	0.0908	1	pCi/g	1					
Zinc-65	U	0.00458	+/-0.0375	0.0574	.2	pCi/g	1					
Rad Gas Flow												
GFPC, Gross A/B, solid												
Alpha		1.79	+/-0.487	0.473	1	pCi/g	1	TMC	03/03/00	0341	11565	7
Beta		3.20	+/-0.674	0.979	1	pCi/g	1					
GFPC, Sr90, solid												
Strontium-90	U	-0.375	+/-0.641	1.65	7.5	pCi/g	1	AAK	02/23/00	1716	11639	8
Rad Liquid Scint												
LSC, Tritium Dist, solid												
Tritium	U	1.01	+/-2.43	4.18	6	pCi/g	1	FDP	02/19/00	1534	12469	9
Liquid Scint C14, solid												
Carbon-14	U	0.032	+/-0.124	0.214	1	pCi/g	1	KDA	03/16/00	0800	12078	10
Liquid Scint Ni63, solid												
Nickel-63	UJ-K	-0.964	+/-0.796	1.91	2	pCi/g	1	AEA	03/19/00	0332	11946	11
Liquid Scint Tc99, solid												
Technetium-99	UJ-K	-0.399	+/-0.254	0.729	5	pCi/g	1	AEA	02/21/00	1706	11952	12

The following Prep Methods were performed

Method	Description	Analyst	Date	Time	Prep Batch
Ash Soil Prep	Ash Soil Prep EPI A-021,A-021B,A-026	CRS	02/10/00	1423	11205
Dry Soil Prep	Dry Soil Prep EPI A-021,A-021B,A-026	CRS	02/09/00	1206	10932
SW846 3550B	3550B Pesticide/PCB Prep Soil	RDH	02/17/00	1528	12217

The following Analytical Methods were performed

Method	Description
1	DOE EML HASL 300
2	DOE EML HASL 300
3	DOE EML HASL 300
4	DOE EML HASL 300
5	LANL EM-9
6	DOE EML HASL 300
7	EPA 900

P O Box 30712 •Charleston, SC 29417 •2040 Savage Road •29407
(843) 556-8171 •Fax (843) 766-1178

GENERAL ENGINEERING LABORATORIES

Meeting today's needs with a vision for tomorrow.

Certificate of Analysis

Company : Brookhaven National Laboratory
Address : OER
Building 51M
Upton, NY 11973-5000
Contact: Ms. Anna Bou
Project: Routine Analytical

Report Date: March 29, 2000

Client Sample ID: 075-002000203-36
Sample ID: 21511003

Project: BRKL00297
Client ID: BRKL001

Parameter	Qualifier	Result	.	DL	RL	Units	DF	AnalystDate	Time	Batch	Method
8	EPA 905.0										
9	EPA 906.0										
10	EPA 504.1										
11	DOE RESL Ni-1										
12	DOE EML HASL 300										

Notes:
The Qualifiers in this report are defined as follows :

DL Failed required detection limit.
RI Not quantified due to interference.
U Sample result < .5*MDA and MDA <= RDL.
UJ .5*MDA < Sample result < MDA and MDA <= RDL.
UJ-Q Not quantified due to low abundance.

The above sample is reported on a dry weight basis.
This data report has been prepared and reviewed in accordance with General Engineering Laboratories, Inc. standard operating procedures. Please direct any questions to your Project Manager, Nancy Slater at 843-556-8171 Ext. 4438.

Wanda C Jennes

Reviewed by

P O Box 30712 •Charleston, SC 29417 •2040 Savage Road •29407