PFS Remediation -Final Verification Sampling

Data Package 3

COC #	SDG#	Sample Description	Sample Number	Location #
6361	22131	PFS 4" line 32" off 704 - 106' from Bldg. 704, 0-6"	065-001000215-30	L8
6361	22131	PFS 4" line 32" off 704 - 106' from Bldg. 704, 6-12"	065-002000215-30	L9
6361	22131	PFS 4" line 32" off 704 - 106' from Bldg. 704, 12-18"	065-003000215-30	L10
6361	22131	PFS 4" line 32" off 704 - 125' from Bldg. 704, 0-6"	065-004000215-30	L11
6361	22131	PFS 4" line 32" off 704 - 125' from Bldg. 704, 6-12"	065-005000215-30	L12
6361	22131	PFS 4" line 32" off 704 - 125' from Bldg. 704, 12-18"	065-006000215-30	L13
6361	22131	Trip Blank	076-400000215-12	
6362	22131	PFS Overburden w/asphalt cover 80-120' from Bldg. 704	065-001000215-36	O3
6362	22131	PFS Overburden w/asphalt cover 120-140' from Bldg. 704	065-002000215-36	O4
6362	22131	PFS Overburden w/asphalt cover 140-150' from Bldg. 704	065-003000215-36	O5

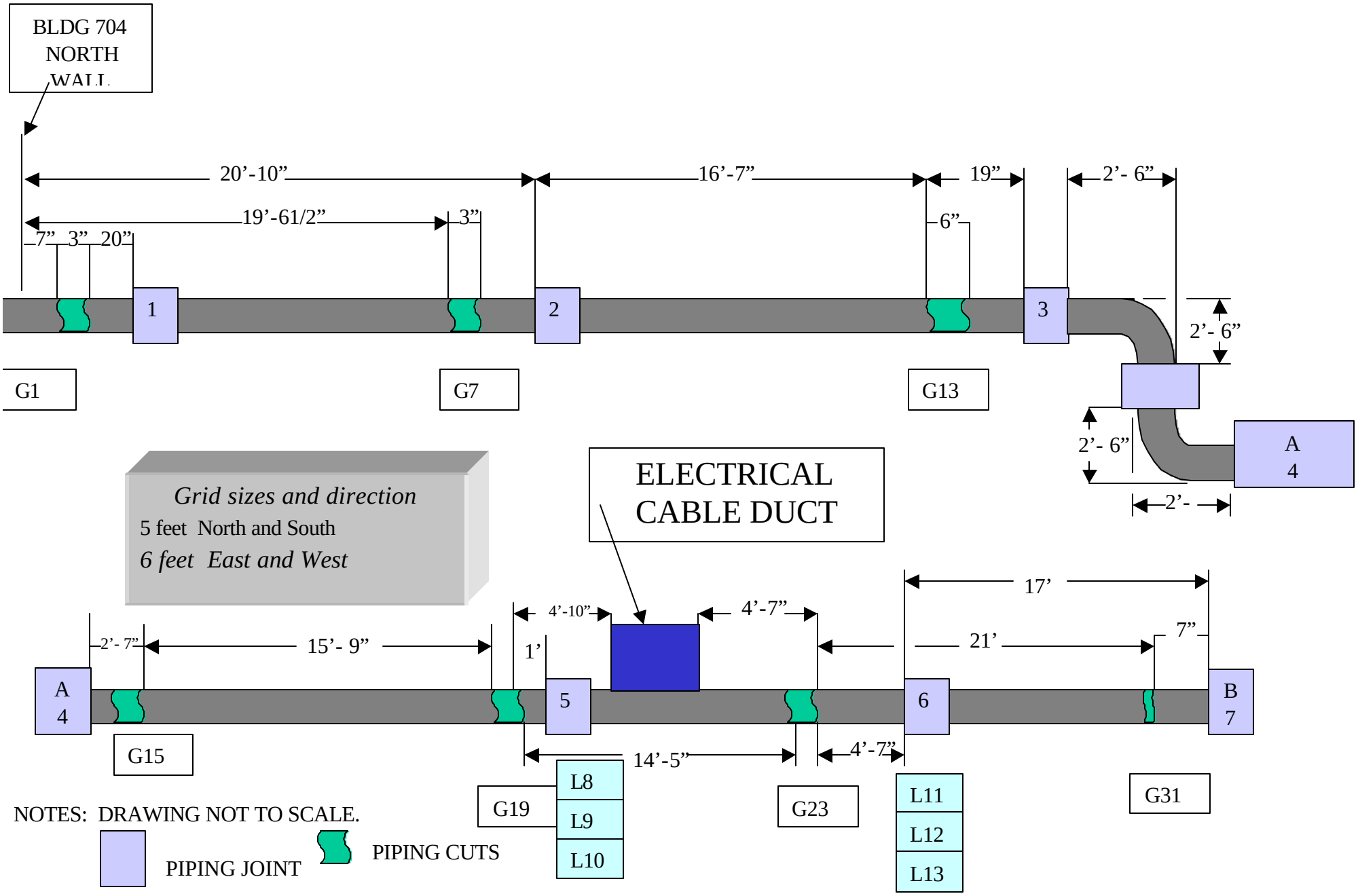

Data Package 3 Relative Soil Sample Locations L8 – L13

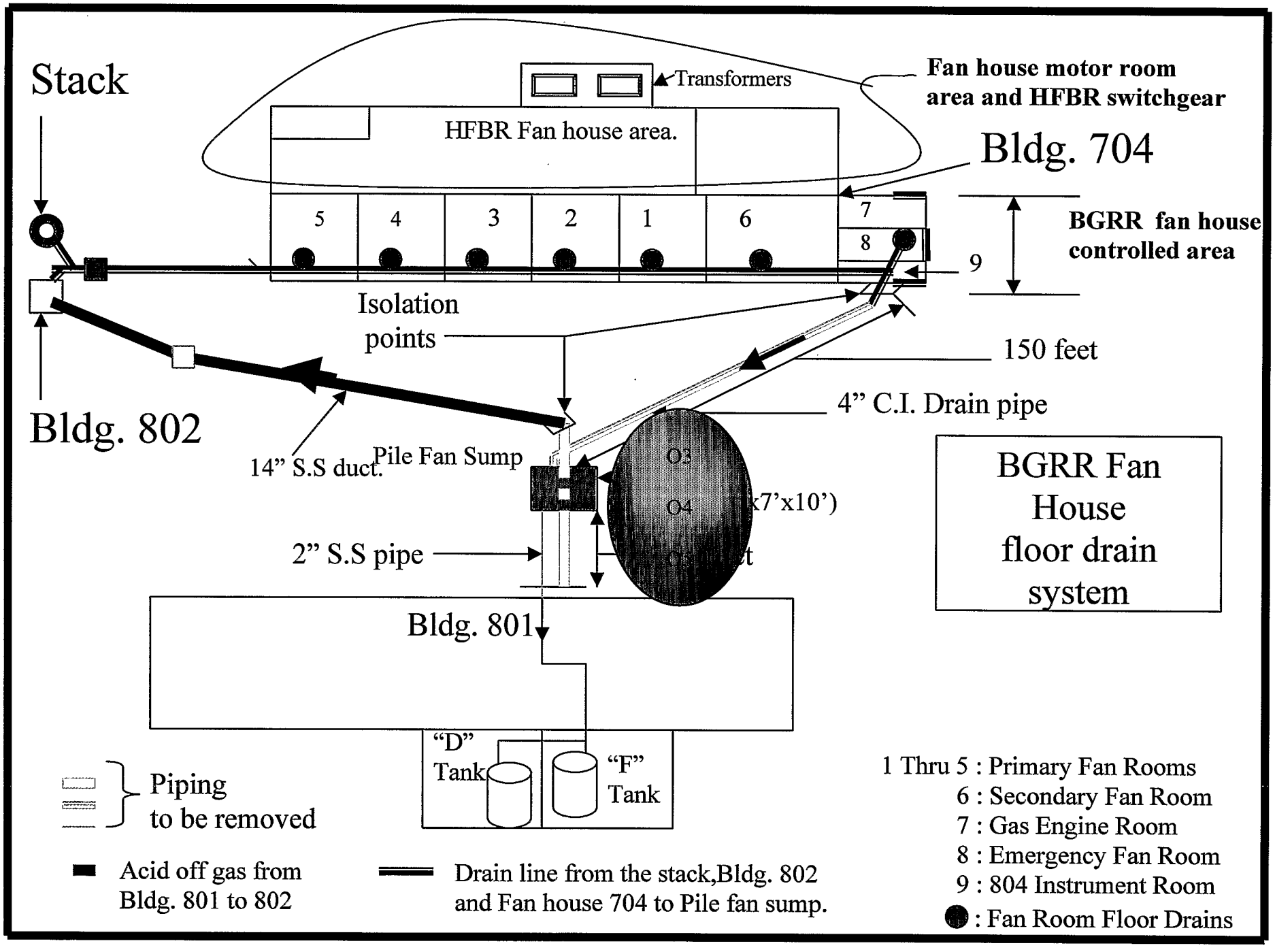

Data Package 3 Over Burden Relative Sample Locations O3 - O5

GENERAL ENGINEERING LABORATORIES

Meeting today's needs with a vision for tomorrow.

March 31, 2000

Anna Bou
Brookhaven National Laboratory
Building 51M
Upton, NY 11973

(631) 344-5140

Re: Project – BGRR Pile Fan Sump Overburden
Chain of Custody – 6361 and 6362
Project Manager – S. Sprengel
Account # - 07314
Release # - 22131 : SVOA, Pest, VOA, Metals, Rad

Dear Ms. Bou:

I am sending you the data package for the analysis of samples BGRR Pile Fan Sump Overburden Project at Brookhaven National Laboratory. General Engineering Laboratories appreciates this opportunity to provide you with analytical results and trusts that you will find everything in order and to your satisfaction. If you have any questions, please do not hesitate in contacting me at (843) 556-8171.

Yours very truly,

Nancy A. Slater
Project Manager

enclosure

P O Box 30712 • Charleston, SC 29417 • 2040 Savage Road • 29407
(843) 556-8171 • Fax (843) 766-1178

Printed on recycled paper.

22131%

ASL Prefix No.

DQL

BROOKHAVEN NATIONAL LABORATORY

Page ___ of ___

Chain of Custody No. 6362

SAMPLING CHAIN OF CUSTODY

Carrier/Waybill #_____

ASL Analysis Requested By	Sampling Contractor	Analytical Laboratory
Name: S. Musolino	Name: ESD Field Team.	Name: General Engineering.
Life No: 15075 Ext: 4211	Address: T-533	Address: 2040 Savage Rd
Acct. No: 07314 Dept: ERD	City: St: Zip:	City: Charleston St: SC Zip: 29417
Email Reports To:	Contact: R. Lagattolla	Contact: Nancy Slater
1 S. Musolino	Phone: 344-7129	Phone: (843) 556-8171
2 C. Newson	Email / Fax: 344-4191	Email / Fax:
Project Name:	Project Manager:	Field Engineer:
BGRR Pile Fan Sump overburden	Steve. Sprengel	S. Springle

Comments:
*See Attached Sheet For Rad analysis Methods.

Analysis Requested: Alpha/Beta; Tritium; Gamma; Strontium; 524.2; 624; PAH's; Tc-99, C-14, Ni-63, Th-232; Ra-226, I-129, Am-241; U-234/5/8, Pu 238/9; Pesticides

ASL SEQ. UID	SFX	Site ID	Depth	Date	Time	Matrix	Location Description	Cont Volume	Cont Type	N of Cont	Preservative	Alpha/Beta	Tritium	Gamma	Strontium	524.2	624	PAH's	Tc-99, C-14, Ni-63, Th-232	Ra-226, I-129, Am-241	U-234/5/8, Pu 238/9	Pesticides	
001		065-001000215-36	0-2	2/15/00	1354	S	overburden/w	8oz	AG	1	—							X					.1 001
001		065-001000215-36	0-2	2/15/00	1354	S	Asphalt cover	8oz	AG	1		X	X	X	X				X	X	X		003
CB							between 80-120ft																CB
CB							From bldg. 704																CB
CB																							CB
002		065-002000215-36	0-2	2/15/00	1357	S	overburden w/	8oz	AG	1								X					.1 002
002		065-002000215-36	0-2	2/15/00	1357	S	asphalt cover between	8oz	AG	1		X	X	X	X				X	X	X		004
CB							120-140 ft from bldg																CB
003		065-003000215-36	0-2	2/15/00	1410	S	overburden w/	8oz	AG	1								X	PE			X	002
003		065-003000215-36	0-2	2/15/00	1410	S	Asphalt cover	8oz	AG	1		X	X	X	X				X	X	X		006
CB							140-150' ft from bldg																CB

1 Relinquished By / Date / Time	2 Relinquished By / Date / Time	3 Relinquished By / Date / Time
Print: Richard Lagattolla	Print:	Print:
Signature: Richard Lagattolla 2/18/00 0943	Signature:	Signature:
1 Received By / Date / Time	**2 Received By / Date / Time**	**3 Received By / Date / Time**
Print: Gustavus Chandler 2/19/00 0900	Print:	Print:
Signature: Gustavus Chandler	Signature:	Signature:

Contractor Lab Sample Disposal:
- ☐ Return To Client
- ☐ Disposal By Lab
- ☐ Archive For ____ Months

Turn-Around-Time Required:
- ☐ RUSH (1 Day)
- ☐ 14 Days
- ☐ 30 Days
- ☐ 7 Days
- ☐ Other ( )

BNL F3101

Distribution: WHITE - Stays with Sample; PINK - Field Copy (Sampler); GOLDENROD - Returned to Client with Report

R

ASL Prefix No. | DQL

BROOKHAVEN NATIONAL LABORATORY

Page 2 of 2 — Chain of Custody No. 6361

SAMPLING CHAIN OF CUSTODY

Carrier/Waybill #

ASL Analysis Requested By	Sampling Contractor	Analytical Laboratory
Name: S. Musolino	Name: ESD Field Sampling	Name: General Engineering
Life No: 15075 Ext: 4211	Address: T-533	Address: 2040 Savage Rd
Acct. No: 07314 Dept: ERD	City: St: Zip:	City: Charleston St: SC Zip: 29417
Email Reports To:	Contact: R Logattolla	Contact: N Slater
1	Phone: 344-7129	Phone: 843-556-8171
2	Email / Fax: 344-4191	Email / Fax:
Project Name:	Project Manager:	Field Engineer:
BGRR pile Fan Sump		

Comments: * see attach sheet For Rad Methods

Verification Sample under PFS/Pipe

ASL SEQ. UID	SFX	Site ID	Depth	Date	Time	Matrix	Location Description --->	Cont Volume	Cont Type	N of Cont	Preservative	Alpha/Beta	Tritium	Gamma	Strontium-90	524.2	624	Totals metals-CLP OLM 04.0	VOA-CLP OLM 03.2	TC99, C-14, Ni63, Th-232	Ra-226, I-129, Am-241	U-234/235/238	Pu-238/239/240	
005		06S-005000215-30	6"-12"	2/15/00	1055	S	125' from bldg 704	4 oz	AG	1	—								X	013				
005		⊥	⊥	2/15/00	1055	S	↑	8 oz	AG	1	—							X		20				
005		⊥	⊥	2/15/00	1055	S		8 oz	AG	1	—	Y	X	X	X						X	Y	X	X	008
006		06S-006000215-30	12"-18"	2/15/00	1105	S		4 oz	AG	1	—								X	014				
006		⊥	⊥	2/15/00	1105	S	↓	8 oz	AG	1	—							X	021					
006		⊥	⊥	2/15/00	1105	S	125' from bldg 704	8 oz	AG	1	—	X	X	X	X						X	X	X	X	009
007		076-400000215-12	0	2/15/00	0830	W	TB-2	40 mL	CS	2	HCL								X	015				

1 Relinquished By / Date / Time		3 Relinquished By / Date / Time
Print: Richard Logattolla	Print	Print
Signature: Richard Logattolla 2/18/00 0943	Signature	Signature
1 Received By / Date / Time		**3 Received By / Date / Time**
Print: Gustavus Chandler 2/19/00 0900	Print	Print
Signature: Gustavus Chandler	Signature	Signature

Contractor Lab Sample Disposal:
- ☐ Return To Client
- ☐ Disposal By Lab
- ☐ Archive For ____ Months

Turn-Around Time Required:
- ☐ RUSH (1 Day)
- ☐ 14 Days
- ☐ 30 Days
- ☐ 7 Days
- ☐ Other ( )

BNL F3101

Distribution: WHITE - Stays with Sample; PINK - Field Copy (Sampler); GOLDENROD - Returned to Client with Report

ASL Prefix No.

DQL

BROOKHAVEN
NATIONAL LABORATORY

Page 1 of 2

Chain of Custody No. 6361

SAMPLING CHAIN OF CUSTODY

Carrier/Waybill #

ASL Analysis Requested By	Sampling Contractor	Analytical Laboratory
Name: S. Musolino	Name: ESD Field Team	Name: General Engineering
Life No: 15075. Ext: 4211	Address: T-533	Address: 2040 Savage Rd
Acct. No: 07314 Dept: ERD	City: St: Zip:	City: Charleston St: SC Zip: 29417
Email Reports To:	Contact: R. Lagattolla	Contact: Nancy Slater.
1 S. Musolino	Phone: 344-7129	Phone: (843) 556-8171
2 C. Newson	Email / Fax: 344-4191	Email / Fax:
Project Name:	Project Manager:	Field Engineer:
BGRR pile FAN sump	Steve Sprengel	

Comments: Verification Samples under pipe/DFS. * See Attached sheet for Pad Methods

ASL SEQ. UID	SFX	Site ID	Depth	Date	Time	Matrix	Location Description	Cont Volume	Cont Type	N of Cont	Preservative	Alpha/Beta	Tritium	Gamma	Strontium-90	524.2	624	Total Metals CLPOLM04.0	VOA-CLPOLM 03.2	TC 99, Cr4, Ni-63, Th-232	Ra-226, I-129, Am-241	U-234/235/238	PU-238/239/240	
001		065-001000215-30	0-6"	2/15/00	1012	S	106' from bldg. 704	4 oz	AG	1	—								X	~~013~~	016			
001		↓	↓	↓	1012	S	↓	8 oz	AG	1	—							X		022				
001		↓	↓	↓	1012	S	↓	8 oz	AG	1	—	X	X	X	X					X	X	X	X	008
002		065-002000215-30	6"-12"	↓	1023	S	↓	4 oz	AG	1	—								X	~~014~~	017			
002		↓	↓	↓	1023	S	↓	8 oz	AG	1	—							X		023				
002		↓	↓	↓	1023	S	106' from bldg. 704	8 oz	AG	1	—	X	X	X	X					X	X	X	X	009
003		065-003000215-30	12"-18"	↓	1034	S	↓	4 oz	AG	1	—								X	~~015~~	018			
003		↓	↓	↓	1034	S	↓	8 oz	AG	1	—							X		024				
003		↓	↓	↓	1034	S	106' from bldg. 704	8 oz	AG	1	—	X	X	X	X					X	X	X	X	010
004		065-004000215-30	0-6"	↓	1046	S	125' from bldg. 704	4 oz	AG	1	—								X	~~017~~	019			
004		↓	↓	↓	1046	S	↓	8 oz	AG	1	—							X		025				
004		↓	↓	↓	1046	S	↓	8 oz	AG	1	—	X	X	X	X					X	X	X	X	011

1 Relinquished By / Date / Time		3 Relinquished By / Date / Time
Print: Richard Lagattolla	Print	Print
Signature: Richard Lagattolla 2/18/00 0943	Signature	Signature
1 Received By / Date / Time	**Received By / Date / Time**	**3 Received By / Date / Time**
Print: Gustavus Chandler 2/19/00 0900	Print	Print
Signature: Gustavus Chandler	Signature	Signature

Contractor Lab Sample Disposal:
- ☐ Return To Client
- ☐ Disposal By Lab
- ☐ Archive For ____ Months

Turn-Around Time Required:
- ☐ RUSH (1 Day)
- ☐ 14 Days
- ☐ 30 Days
- ☐ 7 Days
- ☐ Other ( )

BNL F3101

Distribution: WHITE - Stays with Sample; PINK - Field Copy (Sampler); GOLDENROD - Returned to Client with Report

1A
VOLATILE ORGANICS ANALYSIS DATA SHEET

EPA SAMPLE NO.

065-0010
00215-30

Lab Name: GENERAL ENGINEERING LABOR Contract: N/A

Lab Code: N/A Case No.: N/A SAS No.: N/A SDG No.: 22131

Matrix: (soil/water) SOIL Lab Sample ID: 22131016

Sample wt/vol: 5.4 (g/mL) G Lab File ID: 1Z121

Level: (low/med) LOW Date Received: 02/19/00

% Moisture: not dec. 20 Date Analyzed: 03/06/00

GC Column: DB-624 ID: 0.25 (mm) Dilution Factor: 1.0

Soil Extract Volume:_____(uL) Soil Aliquot Volume: _____(uL

CAS NO.	COMPOUND	CONCENTRATION UNITS: (ug/L or ug/Kg) UG/KG	Q
74-87-3	Chloromethane	1.2	U
75-01-4	Vinyl chloride	1.2	U
74-83-9	Bromomethane	1.2	U
75-00-3	Chloroethane	1.2	U
75-35-4	1,1-Dichloroethylene	1.2	U
67-64-1	Acetone	4.2	JB
75-15-0	Carbon disulfide	5.8	U
75-09-2	Methylene chloride	2.8	JB
75-34-3	1,1-Dichloroethane	1.2	U
108-05-4	Vinyl acetate	5.8	U
78-93-3	2-Butanone	5.8	U
540-59-0	1,2-Dichloroethylene(total)	2.3	U
67-66-3	Chloroform	1.2	U
71-55-6	1,1,1-Trichloroethane	1.2	U
56-23-5	Carbon tetrachloride	1.2	U
107-06-2	1,2-Dichloroethane	1.2	U
71-43-2	Benzene	1.2	U
79-01-6	Trichloroethylene	1.2	U
78-87-5	1,2-Dichloropropane	1.2	U
75-27-4	Bromodichloromethane	1.2	U
10061-01-5	cis-1,3-Dichloropropylene	1.2	U
108-10-1	4-Methyl-2-pentanone	5.8	U
108-88-3	Toluene	1.2	U
10061-02-6	trans-1,3-Dichloropropylene	1.2	U
79-00-5	1,1,2-Trichloroethane	1.2	U
591-78-6	2-Hexanone	5.8	U
127-18-4	Tetrachloroethylene	1.2	U
124-48-1	Dibromochloromethane	1.2	U
108-90-7	Chlorobenzene	1.2	U
100-41-4	Ethylbenzene	1.2	U
1330-20-7	Xylenes (total)	3.5	U
100-42-5	Styrene	1.2	U
75-25-2	Bromoform	1.2	U

1A
VOLATILE ORGANICS ANALYSIS DATA SHEET

EPA SAMPLE NO.

065-0010
00215-30

Lab Name: GENERAL ENGINEERING LABOR Contract: N/A

Lab Code: N/A Case No.: N/A SAS No.: N/A SDG No.: 22131

Matrix: (soil/water) SOIL Lab Sample ID: 22131016

Sample wt/vol: 5.4 (g/mL) G Lab File ID: 1Z121

Level: (low/med) LOW Date Received: 02/19/00

% Moisture: not dec. 20 Date Analyzed: 03/06/00

GC Column: DB-624 ID: 0.25 (mm) Dilution Factor: 1.0

Soil Extract Volume:_____(uL) Soil Aliquot Volume: _____(uL

CAS NO.	COMPOUND	CONCENTRATION UNITS: (ug/L or ug/Kg) UG/KG	Q
79-34-5	1,1,2,2-Tetrachloroethane	1.2	U

FORM I VOA

OLM03.0

1A
VOLATILE ORGANICS ANALYSIS DATA SHEET

EPA SAMPLE NO.

065-0020
00215-30

Lab Name: GENERAL ENGINEERING LABOR Contract: N/A

Lab Code: N/A Case No.: N/A SAS No.: N/A SDG No.: 22131

Matrix: (soil/water) SOIL Lab Sample ID: 22131017

Sample wt/vol: 5.0 (g/mL) G Lab File ID: 1Z215

Level: (low/med) LOW Date Received: 02/19/00

% Moisture: not dec. 5 Date Analyzed: 03/07/00

GC Column: DB-624 ID: 0.25 (mm) Dilution Factor: 1.0

Soil Extract Volume:_____(uL) Soil Aliquot Volume: _____(uL

CAS NO.	COMPOUND	CONCENTRATION UNITS: (ug/L or ug/Kg) UG/KG	Q
74-87-3	Chloromethane	1.0	U
75-01-4	Vinyl chloride	1.0	U
74-83-9	Bromomethane	1.0	U
75-00-3	Chloroethane	1.0	U
75-35-4	1,1-Dichloroethylene	1.0	U
67-64-1	Acetone	3.8	JB
75-15-0	Carbon disulfide	5.3	U
75-09-2	Methylene chloride	2.4	JB
75-34-3	1,1-Dichloroethane	1.0	U
108-05-4	Vinyl acetate	5.3	U
78-93-3	2-Butanone	5.3	U
540-59-0	1,2-Dichloroethylene(total)	2.1	U
67-66-3	Chloroform	1.0	U
71-55-6	1,1,1-Trichloroethane	1.0	U
56-23-5	Carbon tetrachloride	1.0	U
107-06-2	1,2-Dichloroethane	1.0	U
71-43-2	Benzene	1.0	U
79-01-6	Trichloroethylene	1.0	U
78-87-5	1,2-Dichloropropane	1.0	U
75-27-4	Bromodichloromethane	1.0	U
10061-01-5	cis-1,3-Dichloropropylene	1.0	U
108-10-1	4-Methyl-2-pentanone	5.3	U
108-88-3	Toluene	1.0	U
10061-02-6	trans-1,3-Dichloropropylene	1.0	U
79-00-5	1,1,2-Trichloroethane	1.0	U
591-78-6	2-Hexanone	5.3	U
127-18-4	Tetrachloroethylene	1.0	U
124-48-1	Dibromochloromethane	1.0	U
108-90-7	Chlorobenzene	1.0	U
100-41-4	Ethylbenzene	1.0	U
1330-20-7	Xylenes (total)	3.2	U
100-42-5	Styrene	1.0	U
75-25-2	Bromoform	1.0	U

1A
VOLATILE ORGANICS ANALYSIS DATA SHEET

EPA SAMPLE NO.

065-0020
00215-30

Lab Name: GENERAL ENGINEERING LABOR Contract: N/A

Lab Code: N/A Case No.: N/A SAS No.: N/A SDG No.: 22131

Matrix: (soil/water) SOIL Lab Sample ID: 22131017

Sample wt/vol: 5.0 (g/mL) G Lab File ID: 1Z215

Level: (low/med) LOW Date Received: 02/19/00

% Moisture: not dec. 5 Date Analyzed: 03/07/00

GC Column: DB-624 ID: 0.25 (mm) Dilution Factor: 1.0

Soil Extract Volume:_____(uL) Soil Aliquot Volume: _____(uL

CAS NO.	COMPOUND	CONCENTRATION UNITS: (ug/L or ug/Kg) UG/KG	Q
79-34-5	1,1,2,2-Tetrachloroethane	1.0	U

1A
VOLATILE ORGANICS ANALYSIS DATA SHEET

EPA SAMPLE NO.

065-0030
00215-30

Lab Name: GENERAL ENGINEERING LABOR Contract: N/A

Lab Code: N/A Case No.: N/A SAS No.: N/A SDG No.: 22131

Matrix: (soil/water) SOIL Lab Sample ID: 22131018

Sample wt/vol: 5.3 (g/mL) G Lab File ID: 1Z216

Level: (low/med) LOW Date Received: 02/19/00

% Moisture: not dec. 4 Date Analyzed: 03/07/00

GC Column: DB-624 ID: 0.25 (mm) Dilution Factor: 1.0

Soil Extract Volume:_____(uL) Soil Aliquot Volume: _____(uL

CAS NO.	COMPOUND	CONCENTRATION UNITS: (ug/L or ug/Kg) UG/KG	Q
74-87-3	Chloromethane	0.98	U
75-01-4	Vinyl chloride	0.98	U
74-83-9	Bromomethane	0.98	U
75-00-3	Chloroethane	0.98	U
75-35-4	1,1-Dichloroethylene	0.98	U
67-64-1	Acetone	3.5	JB
75-15-0	Carbon disulfide	4.9	U
75-09-2	Methylene chloride	2.1	JB
75-34-3	1,1-Dichloroethane	0.98	U
108-05-4	Vinyl acetate	4.9	U
78-93-3	2-Butanone	4.9	U
540-59-0	1,2-Dichloroethylene(total)	2.0	U
67-66-3	Chloroform	0.98	U
71-55-6	1,1,1-Trichloroethane	0.98	U
56-23-5	Carbon tetrachloride	0.98	U
107-06-2	1,2-Dichloroethane	0.98	U
71-43-2	Benzene	0.98	U
79-01-6	Trichloroethylene	0.98	U
78-87-5	1,2-Dichloropropane	0.98	U
75-27-4	Bromodichloromethane	0.98	U
10061-01-5	cis-1,3-Dichloropropylene	0.98	U
108-10-1	4-Methyl-2-pentanone	4.9	U
108-88-3	Toluene	0.98	U
10061-02-6	trans-1,3-Dichloropropylene	0.98	U
79-00-5	1,1,2-Trichloroethane	0.98	U
591-78-6	2-Hexanone	4.9	U
127-18-4	Tetrachloroethylene	0.98	U
124-48-1	Dibromochloromethane	0.98	U
108-90-7	Chlorobenzene	0.98	U
100-41-4	Ethylbenzene	0.98	U
1330-20-7	Xylenes (total)	3.0	U
100-42-5	Styrene	0.98	U
75-25-2	Bromoform	0.98	U

1A
VOLATILE ORGANICS ANALYSIS DATA SHEET

EPA SAMPLE NO.

065-0030
00215-30

Lab Name: GENERAL ENGINEERING LABOR Contract: N/A

Lab Code: N/A Case No.: N/A SAS No.: N/A SDG No.: 22131

Matrix: (soil/water) SOIL Lab Sample ID: 22131018

Sample wt/vol: 5.3 (g/mL) G Lab File ID: 1Z216

Level: (low/med) LOW Date Received: 02/19/00

% Moisture: not dec. 4 Date Analyzed: 03/07/00

GC Column: DB-624 ID: 0.25 (mm) Dilution Factor: 1.0

Soil Extract Volume:_____(uL) Soil Aliquot Volume: _____(uL

CAS NO.	COMPOUND	CONCENTRATION UNITS: (ug/L or ug/Kg) UG/KG	Q
79-34-5	1,1,2,2-Tetrachloroethane	0.98	U

FORM I VOA OLM03.0

1A
VOLATILE ORGANICS ANALYSIS DATA SHEET

EPA SAMPLE NO.

065-0040
00215-30

Lab Name: GENERAL ENGINEERING LABOR Contract: N/A

Lab Code: N/A Case No.: N/A SAS No.: N/A SDG No.: 22131

Matrix: (soil/water) SOIL Lab Sample ID: 22131019

Sample wt/vol: 5.4 (g/mL) G Lab File ID: 1Z217

Level: (low/med) LOW Date Received: 02/19/00

% Moisture: not dec. 8 Date Analyzed: 03/07/00

GC Column: DB-624 ID: 0.25 (mm) Dilution Factor: 1.0

Soil Extract Volume:_____(uL) Soil Aliquot Volume: _____(uL

CAS NO.	COMPOUND	CONCENTRATION UNITS: (ug/L or ug/Kg) UG/KG	Q
74-87-3	Chloromethane	1.0	U
75-01-4	Vinyl chloride	1.0	U
74-83-9	Bromomethane	1.0	U
75-00-3	Chloroethane	1.0	U
75-35-4	1,1-Dichloroethylene	1.0	U
67-64-1	Acetone	3.5	JB
75-15-0	Carbon disulfide	5.0	U
75-09-2	Methylene chloride	2.3	JB
75-34-3	1,1-Dichloroethane	1.0	U
108-05-4	Vinyl acetate	5.0	U
78-93-3	2-Butanone	5.0	U
540-59-0	1,2-Dichloroethylene(total)	2.0	U
67-66-3	Chloroform	1.0	U
71-55-6	1,1,1-Trichloroethane	1.0	U
56-23-5	Carbon tetrachloride	1.0	U
107-06-2	1,2-Dichloroethane	1.0	U
71-43-2	Benzene	1.0	U
79-01-6	Trichloroethylene	1.0	U
78-87-5	1,2-Dichloropropane	1.0	U
75-27-4	Bromodichloromethane	1.0	U
10061-01-5	cis-1,3-Dichloropropylene	1.0	U
108-10-1	4-Methyl-2-pentanone	5.0	U
108-88-3	Toluene	1.0	U
10061-02-6	trans-1,3-Dichloropropylene	1.0	U
79-00-5	1,1,2-Trichloroethane	1.0	U
591-78-6	2-Hexanone	5.0	U
127-18-4	Tetrachloroethylene	1.0	U
124-48-1	Dibromochloromethane	1.0	U
108-90-7	Chlorobenzene	1.0	U
100-41-4	Ethylbenzene	1.0	U
1330-20-7	Xylenes (total)	3.0	U
100-42-5	Styrene	1.0	U
75-25-2	Bromoform	1.0	U

1A
VOLATILE ORGANICS ANALYSIS DATA SHEET

EPA SAMPLE NO.

065-0040
00215-30

Lab Name: GENERAL ENGINEERING LABOR Contract: N/A

Lab Code: N/A Case No.: N/A SAS No.: N/A SDG No.: 22131

Matrix: (soil/water) SOIL Lab Sample ID: 22131019

Sample wt/vol: 5.4 (g/mL) G Lab File ID: 1Z217

Level: (low/med) LOW Date Received: 02/19/00

% Moisture: not dec. 8 Date Analyzed: 03/07/00

GC Column: DB-624 ID: 0.25 (mm) Dilution Factor: 1.0

Soil Extract Volume:_____(uL) Soil Aliquot Volume: _____(uL

CAS NO.	COMPOUND	CONCENTRATION UNITS: (ug/L or ug/Kg) UG/KG	Q
79-34-5	1,1,2,2-Tetrachloroethane	1.0	U

FORM I VOA OLM03.0

1A
VOLATILE ORGANICS ANALYSIS DATA SHEET

EPA SAMPLE NO.

065-0050
00215-30

Lab Name: GENERAL ENGINEERING LABOR Contract: N/A

Lab Code: N/A Case No.: N/A SAS No.: N/A SDG No.: 22131

Matrix: (soil/water) SOIL Lab Sample ID: 22131013

Sample wt/vol: 5.2 (g/mL) G Lab File ID: 1Z119

Level: (low/med) LOW Date Received: 02/19/00

% Moisture: not dec. 6 Date Analyzed: 03/06/00

GC Column: DB-624 ID: 0.25 (mm) Dilution Factor: 1.0

Soil Extract Volume:_____(uL) Soil Aliquot Volume: _____(uL

CAS NO.	COMPOUND	CONCENTRATION UNITS: (ug/L or ug/Kg) UG/KG	Q
74-87-3	Chloromethane	1.0	U
75-01-4	Vinyl chloride	1.0	U
74-83-9	Bromomethane	1.0	U
75-00-3	Chloroethane	1.0	U
75-35-4	1,1-Dichloroethylene	1.0	U
67-64-1	Acetone	3.8	JB
75-15-0	Carbon disulfide	5.1	U
75-09-2	Methylene chloride	2.7	JB
75-34-3	1,1-Dichloroethane	1.0	U
108-05-4	Vinyl acetate	5.1	U
78-93-3	2-Butanone	5.1	U
540-59-0	1,2-Dichloroethylene(total)	2.0	U
67-66-3	Chloroform	1.0	U
71-55-6	1,1,1-Trichloroethane	1.0	U
56-23-5	Carbon tetrachloride	1.0	U
107-06-2	1,2-Dichloroethane	1.0	U
71-43-2	Benzene	1.0	U
79-01-6	Trichloroethylene	1.0	U
78-87-5	1,2-Dichloropropane	1.0	U
75-27-4	Bromodichloromethane	1.0	U
10061-01-5	cis-1,3-Dichloropropylene	1.0	U
108-10-1	4-Methyl-2-pentanone	5.1	U
108-88-3	Toluene	1.0	U
10061-02-6	trans-1,3-Dichloropropylene	1.0	U
79-00-5	1,1,2-Trichloroethane	1.0	U
591-78-6	2-Hexanone	5.1	U
127-18-4	Tetrachloroethylene	1.0	U
124-48-1	Dibromochloromethane	1.0	U
108-90-7	Chlorobenzene	1.0	U
100-41-4	Ethylbenzene	1.0	U
1330-20-7	Xylenes (total)	3.1	U
100-42-5	Styrene	1.0	U
75-25-2	Bromoform	1.0	U

1A
VOLATILE ORGANICS ANALYSIS DATA SHEET

EPA SAMPLE NO.

065-0050
00215-30

Lab Name: GENERAL ENGINEERING LABOR Contract: N/A

Lab Code: N/A Case No.: N/A SAS No.: N/A SDG No.: 22131

Matrix: (soil/water) SOIL Lab Sample ID: 22131013

Sample wt/vol: 5.2 (g/mL) G Lab File ID: 1Z119

Level: (low/med) LOW Date Received: 02/19/00

% Moisture: not dec. 6 Date Analyzed: 03/06/00

GC Column: DB-624 ID: 0.25 (mm) Dilution Factor: 1.0

Soil Extract Volume:_____(uL) Soil Aliquot Volume: _____(uL

CAS NO.	COMPOUND	CONCENTRATION UNITS: (ug/L or ug/Kg) UG/KG	Q
79-34-5	1,1,2,2-Tetrachloroethane	1.0	U

1A
VOLATILE ORGANICS ANALYSIS DATA SHEET

EPA SAMPLE NO.

065-0060
00215-30

Lab Name: GENERAL ENGINEERING LABOR Contract: N/A

Lab Code: N/A Case No.: N/A SAS No.: N/A SDG No.: 22131

Matrix: (soil/water) SOIL Lab Sample ID: 22131014

Sample wt/vol: 4.7 (g/mL) G Lab File ID: 1Z120

Level: (low/med) LOW Date Received: 02/19/00

% Moisture: not dec. 7 Date Analyzed: 03/06/00

GC Column: DB-624 ID: 0.25 (mm) Dilution Factor: 1.0

Soil Extract Volume:_____(uL) Soil Aliquot Volume: _____(uL

CAS NO.	COMPOUND	CONCENTRATION UNITS: (ug/L or ug/Kg) UG/KG	Q
74-87-3	Chloromethane	1.1	U
75-01-4	Vinyl chloride	1.1	U
74-83-9	Bromomethane	1.1	U
75-00-3	Chloroethane	1.1	U
75-35-4	1,1-Dichloroethylene	1.1	U
67-64-1	Acetone	4.2	JB
75-15-0	Carbon disulfide	5.7	U
75-09-2	Methylene chloride	3.6	JB
75-34-3	1,1-Dichloroethane	1.1	U
108-05-4	Vinyl acetate	5.7	U
78-93-3	2-Butanone	5.7	U
540-59-0	1,2-Dichloroethylene(total)	2.3	U
67-66-3	Chloroform	1.1	U
71-55-6	1,1,1-Trichloroethane	1.1	U
56-23-5	Carbon tetrachloride	1.1	U
107-06-2	1,2-Dichloroethane	1.1	U
71-43-2	Benzene	1.1	U
79-01-6	Trichloroethylene	1.1	U
78-87-5	1,2-Dichloropropane	1.1	U
75-27-4	Bromodichloromethane	1.1	U
10061-01-5	cis-1,3-Dichloropropylene	1.1	U
108-10-1	4-Methyl-2-pentanone	5.7	U
108-88-3	Toluene	1.1	U
10061-02-6	trans-1,3-Dichloropropylene	1.1	U
79-00-5	1,1,2-Trichloroethane	1.1	U
591-78-6	2-Hexanone	5.7	U
127-18-4	Tetrachloroethylene	1.1	U
124-48-1	Dibromochloromethane	1.1	U
108-90-7	Chlorobenzene	1.1	U
100-41-4	Ethylbenzene	1.1	U
1330-20-7	Xylenes (total)	3.4	U
100-42-5	Styrene	1.1	U
75-25-2	Bromoform	1.1	U

1A
VOLATILE ORGANICS ANALYSIS DATA SHEET

EPA SAMPLE NO.

065-0060
00215-30

Lab Name: GENERAL ENGINEERING LABOR Contract: N/A

Lab Code: N/A Case No.: N/A SAS No.: N/A SDG No.: 22131

Matrix: (soil/water) SOIL Lab Sample ID: 22131014

Sample wt/vol: 4.7 (g/mL) G Lab File ID: 1Z120

Level: (low/med) LOW Date Received: 02/19/00

% Moisture: not dec. 7 Date Analyzed: 03/06/00

GC Column: DB-624 ID: 0.25 (mm) Dilution Factor: 1.0

Soil Extract Volume:_____(uL) Soil Aliquot Volume: _____(uL

CAS NO.	COMPOUND	CONCENTRATION UNITS: (ug/L or ug/Kg) UG/KG	Q
79-34-5	1,1,2,2-Tetrachloroethane	1.1	U

FORM I VOA

OLM03.0

1A
VOLATILE ORGANICS ANALYSIS DATA SHEET

EPA SAMPLE NO.

076-4000
00215-12

Lab Name: GENERAL ENGINEERING LABOR Contract: N/A

Lab Code: N/A Case No.: N/A SAS No.: N/A SDG No.: 22131

Matrix: (soil/water) SOIL Lab Sample ID: 22131015

Sample wt/vol: 5.0 (g/mL) G Lab File ID: 1Z214

Level: (low/med) LOW Date Received: 02/19/00

% Moisture: not dec. _____ Date Analyzed: 03/07/00

GC Column: DB-624 ID: 0.25 (mm) Dilution Factor: 1.0

Soil Extract Volume:_____(uL) Soil Aliquot Volume: _____(uL

CAS NO.	COMPOUND	CONCENTRATION UNITS: (ug/L or ug/Kg) UG/KG	Q
74-87-3	Chloromethane	1.0	U
75-01-4	Vinyl chloride	1.0	U
74-83-9	Bromomethane	1.0	U
75-00-3	Chloroethane	1.0	U
75-35-4	1,1-Dichloroethylene	1.0	U
67-64-1	Acetone	7.6	B
75-15-0	Carbon disulfide	5.0	U
75-09-2	Methylene chloride	6.7	B
75-34-3	1,1-Dichloroethane	1.0	U
108-05-4	Vinyl acetate	5.0	U
78-93-3	2-Butanone	2.0	J
540-59-0	1,2-Dichloroethylene(total)	2.0	U
67-66-3	Chloroform	1.0	U
71-55-6	1,1,1-Trichloroethane	1.0	U
56-23-5	Carbon tetrachloride	1.0	U
107-06-2	1,2-Dichloroethane	1.0	U
71-43-2	Benzene	1.0	U
79-01-6	Trichloroethylene	1.0	U
78-87-5	1,2-Dichloropropane	1.0	U
75-27-4	Bromodichloromethane	1.0	U
10061-01-5	cis-1,3-Dichloropropylene	1.0	U
108-10-1	4-Methyl-2-pentanone	5.0	U
108-88-3	Toluene	1.0	U
10061-02-6	trans-1,3-Dichloropropylene	1.0	U
79-00-5	1,1,2-Trichloroethane	1.0	U
591-78-6	2-Hexanone	5.0	U
127-18-4	Tetrachloroethylene	1.0	U
124-48-1	Dibromochloromethane	1.0	U
108-90-7	Chlorobenzene	1.0	U
100-41-4	Ethylbenzene	1.0	U
1330-20-7	Xylenes (total)	3.0	U
100-42-5	Styrene	1.0	U
75-25-2	Bromoform	1.0	U

1A
VOLATILE ORGANICS ANALYSIS DATA SHEET

EPA SAMPLE NO.

076-4000
00215 12

Lab Name: GENERAL ENGINEERING LABOR Contract: N/A

Lab Code: N/A Case No.: N/A SAS No.: N/A SDG No.: 22131

Matrix: (soil/water) SOIL Lab Sample ID: 22131015

Sample wt/vol: 5.0 (g/mL) G Lab File ID: 1Z214

Level: (low/med) LOW Date Received: 02/19/00

% Moisture: not dec. _____ Date Analyzed: 03/07/00

GC Column: DB-624 ID: 0.25 (mm) Dilution Factor: 1.0

Soil Extract Volume:_____(uL) Soil Aliquot Volume: _____(uL

CAS NO.	COMPOUND	CONCENTRATION UNITS: (ug/L or ug/Kg) UG/KG	Q
79-34-5	1,1,2,2-Tetrachloroethane	1.0	U

1B
SEMIVOLATILE ORGANICS ANALYSIS DATA SHEET

EPA SAMPLE NO.

065-0010
00215-36

Lab Name: GENERAL ENGINEERING LABOR Contract: N/A

Lab Code: N/A Case No.: N/A SAS No.: N/A SDG No.: 22131

Matrix: (soil/water) SOIL Lab Sample ID: 22131001

Sample wt/vol: 30.0 (g/mL) G Lab File ID: 8J508

Level: (low/med) LOW Date Received: 02/19/00

% Moisture: 8 decanted: (Y/N) N Date Extracted: 02/25/00

Concentrated Extract Volume: 1.00 (mL) Date Analyzed: 03/03/00

Injection Volume: 1.0 (uL) Dilution Factor: 1.0

GPC Cleanup: (Y/N) N pH: 7.0

CAS NO.	COMPOUND	CONCENTRATION UNITS: (ug/L or ug/Kg) UG/KG	Q
91-20-3	Naphthalene	36.1	U
208-96-8	Acenaphthylene	36.1	U
83-32-9	Acenaphthene	36.1	U
86-73-7	Fluorene	36.1	U
85-01-8	Phenanthrene	237	
120-12-7	Anthracene	64.7	
206-44-0	Fluoranthene	1570	
129-00-0	Pyrene	1370	
56-55-3	Benzo(a)anthracene	819	
218-01-9	Chrysene	913	
205-99-2	Benzo(b)fluoranthene	965	
207-08-9	Benzo(k)fluoranthene	1030	
50-32-8	Benzo(a)pyrene	968	
193-39-5	Indeno(1,2,3-cd)pyrene	454	
53-70-3	Dibenz(a,h)anthracene	181	
191-24-2	Benzo(g,h,i)perylene	453	

1B
SEMIVOLATILE ORGANICS ANALYSIS DATA SHEET

EPA SAMPLE NO.

065-0020
00215-36

Lab Name: GENERAL ENGINEERING LABOR Contract: N/A

Lab Code: N/A Case No.: N/A SAS No.: N/A SDG No.: 22131

Matrix: (soil/water) SOIL Lab Sample ID: 22131002

Sample wt/vol: 30.0 (g/mL) G Lab File ID: 8J509

Level: (low/med) LOW Date Received: 02/19/00

% Moisture: 8 decanted: (Y/N) N Date Extracted: 02/25/00

Concentrated Extract Volume: 1.00(mL) Date Analyzed: 03/03/00

Injection Volume: 1.0(uL) Dilution Factor: 1.0

GPC Cleanup: (Y/N) N pH: 7.0

CAS NO.	COMPOUND	CONCENTRATION UNITS: (ug/L or ug/Kg) UG/KG	Q
91-20-3	Naphthalene	36.3	U
208-96-8	Acenaphthylene	36.3	U
83-32-9	Acenaphthene	36.3	U
86-73-7	Fluorene	36.3	U
85-01-8	Phenanthrene	116	
120-12-7	Anthracene	33.5	J
206-44-0	Fluoranthene	431	
129-00-0	Pyrene	365	
56-55-3	Benzo(a)anthracene	196	
218-01-9	Chrysene	209	
205-99-2	Benzo(b)fluoranthene	228	
207-08-9	Benzo(k)fluoranthene	185	
50-32-8	Benzo(a)pyrene	200	
193-39-5	Indeno(1,2,3-cd)pyrene	85.8	
53-70-3	Dibenz(a,h)anthracene	38.9	
191-24-2	Benzo(g,h,i)perylene	81.8	

1D
PESTICIDE ORGANICS ANALYSIS DATA SHEET

EPA SAMPLE NO.

065-0030
00215-36

Lab Name: GENERAL ENGINEERING LABOR Contract: N/A

Lab Code: N/A Case No.: N/A SAS No.: N/A SDG No.: 22131

Matrix: (soil/water) SOIL Lab Sample ID: 22131012

Sample wt/vol: 30.0 (g/mL) G Lab File ID: 018B1801

% Moisture: 6 decanted: (Y/N) N Date Received: 02/19/00

Extraction: (SepF/Cont/Sonc) SONC Date Extracted: 02/29/00

Concentrated Extract Volume: 5.00(mL) Date Analyzed: 03/01/00

Injection Volume: 1.0(uL) Dilution Factor: 20.0

GPC Cleanup: (Y/N) N pH: 7.0 Sulfur Cleanup: (Y/N) N

CAS NO.	COMPOUND	CONCENTRATION UNITS: (ug/L or ug/Kg) UG/KG	Q
319-84-6	alpha-BHC	14.2	U
319-85-7	beta-BHC	14.2	U
319-86-8	delta-BHC	14.2	U
58-89-9	gamma-BHC (Lindane)	14.2	U
76-44-8	Heptachlor	14.2	U
309-00-2	Aldrin	14.2	U
1024-57-3	Heptachlor epoxide	14.2	U
53494-70-5	Endrin ketone	28.4	U
959-98-8	Endosulfan I	14.2	U
60-57-1	Dieldrin	28.4	U
72-55-9	4,4'-DDE	24.3	J
72-20-8	Endrin	28.4	U
33213-65-9	Endosulfan II	28.4	U
72-54-8	4,4'-DDD	28.4	U
1031-07-8	Endosulfan sulfate	28.4	U
50-29-3	4,4'-DDT	24.2	J
72-43-5	Methoxychlor	142	U
7421-93-4	Endrin aldehyde	28.4	U
8001-35-2	Toxaphene	711	U
57-74-9	Chlordane (tech.)	178	U

TOTAL METALS

INORGANIC ANALYSIS DATA PACKAGE

SDG No.: 22131 Method Type: SW 846

Sample ID: 22131020 Client ID: 065-005000215-30

Contract: BRKL00297 Lab Code: Case No.: SAS No.:

Matrix: SOIL Date Received: 2/19/2000 Level: LOW % Solids: 95.00

CAS No.	Analyte	Concentration	Units	C	Qual	M	DL	Instrument ID	Analytical Run
7429-90-5	Aluminum	1480	mg/kg		E	P	0.63	TJA61 Trace ICP1	31400
7440-36-0	Antimony	0.43	mg/kg	B		P	0.19	TJA61 Trace ICP1	31400
7440-38-2	Arsenic	0.81	mg/kg	B		P	0.20	TJA61 Trace ICP1	31400
7440-39-3	Barium	4.1	mg/kg	B	E	P	0.023	TJA61 Trace ICP1	31400
7440-41-7	Beryllium	0.064	mg/kg	B		P	0.017	TJA61 Trace ICP1	31400
7440-43-9	Cadmium	0.022	mg/kg	U		P	0.022	TJA61 Trace ICP1	31400
7440-70-2	Calcium	120	mg/kg	B	EN	P	0.54	TJA61 Trace ICP1	31400
7440-47-3	Chromium	2.0	mg/kg			P	0.060	TJA61 Trace ICP1	31400
7440-48-4	Cobalt	0.81	mg/kg	B		P	0.066	TJA61 Trace ICP1	31400
7440-50-8	Copper	2.4	mg/kg	B		P	0.098	TJA61 Trace ICP1	31400
7439-89-6	Iron	2140	mg/kg		E	P	0.19	TJA61 Trace ICP1	31400
7439-92-1	Lead	1.9	mg/kg			P	0.11	TJA61 Trace ICP1	31400
7439-95-4	Magnesium	317	mg/kg	B	EN	P	0.73	TJA61 Trace ICP1	31400
7439-96-5	Manganese	40.8	mg/kg		E	P	0.033	TJA61 Trace ICP1	31400
7439-97-6	Mercury	0.0060	mg/kg	U		AV	0.0060	PE CVAA	22800spHg
7440-02-0	Nickel	1.5	mg/kg	B		P	0.11	TJA61 Trace ICP1	31400
7440-09-7	Potassium	91.7	mg/kg	B	N	P	4.0	TJA61 Trace ICP1	31400
7782-49-2	Selenium	0.23	mg/kg	B		P	0.20	TJA61 Trace ICP1	31400
7440-22-4	Silver	0.10	mg/kg	U		P	0.10	TJA61 Trace ICP1	31400
7440-23-5	Sodium	14.8	mg/kg	B		P	0.68	TJA61 Trace ICP2	31500
7440-28-0	Thallium	0.35	mg/kg	U		P	0.35	TJA61 Trace ICP1	31400
7440-62-2	Vanadium	3.5	mg/kg	B	E	P	0.061	TJA61 Trace ICP1	31400
7440-66-6	Zinc	4.9	mg/kg		E	P	0.046	TJA61 Trace ICP1	31400

Color Before: Clarity Before: Texture:

Color After: Clarity After: Artifacts:

Comments:

TOTAL METALS

INORGANIC ANALYSIS DATA PACKAGE

SDG No.: 22131

Method Type: SW 846

Sample ID: 22131021

Client ID: 065-006000215-30

Contract: BRKL00297

Lab Code:

Case No.:

SAS No.:

Matrix: SOIL

Date Received: 2/19/2000

Level: LOW

% Solids: 92.00

CAS No.	Analyte	Concentration	Units	C	Qual	M	DL	Instrument ID	Analytical Run
7429-90-5	Aluminum	2500	mg/kg		E	P	0.68	TJA61 Trace ICP1	31400
7440-36-0	Antimony	0.53	mg/kg	B		P	0.20	TJA61 Trace ICP1	31400
7440-38-2	Arsenic	0.82	mg/kg	B		P	0.22	TJA61 Trace ICP1	31400
7440-39-3	Barium	6.1	mg/kg	B	E	P	0.025	TJA61 Trace ICP1	31400
7440-41-7	Beryllium	0.10	mg/kg	B		P	0.018	TJA61 Trace ICP1	31400
7440-43-9	Cadmium	0.024	mg/kg	U		P	0.024	TJA61 Trace ICP1	31400
7440-70-2	Calcium	197	mg/kg	B	EN	P	0.58	TJA61 Trace ICP1	31400
7440-47-3	Chromium	3.1	mg/kg			P	0.064	TJA61 Trace ICP1	31400
7440-48-4	Cobalt	0.94	mg/kg	B		P	0.070	TJA61 Trace ICP1	31400
7440-50-8	Copper	2.7	mg/kg			P	0.10	TJA61 Trace ICP1	31400
7439-89-6	Iron	2650	mg/kg		E	P	0.21	TJA61 Trace ICP1	31400
7439-92-1	Lead	3.0	mg/kg			P	0.11	TJA61 Trace ICP1	31400
7439-95-4	Magnesium	329	mg/kg	B	EN	P	0.78	TJA61 Trace ICP1	31400
7439-96-5	Manganese	39.6	mg/kg		E	P	0.036	TJA61 Trace ICP1	31400
7439-97-6	Mercury	0.0076	mg/kg	U		AV	0.0076	PE CVAA	22800spHg
7440-02-0	Nickel	1.8	mg/kg	B		P	0.12	TJA61 Trace ICP1	31400
7440-09-7	Potassium	130	mg/kg	B	N	P	4.3	TJA61 Trace ICP1	31400
7782-49-2	Selenium	0.22	mg/kg	U		P	0.22	TJA61 Trace ICP1	31400
7440-22-4	Silver	0.16	mg/kg	B		P	0.11	TJA61 Trace ICP1	31400
7440-23-5	Sodium	35.5	mg/kg	B		P	0.73	TJA61 Trace ICP1	31400
7440-28-0	Thallium	0.38	mg/kg	U		P	0.38	TJA61 Trace ICP1	31400
7440-62-2	Vanadium	4.9	mg/kg	B	E	P	0.066	TJA61 Trace ICP1	31400
7440-66-6	Zinc	5.2	mg/kg		E	P	0.049	TJA61 Trace ICP1	31400

Color Before:

Clarity Before:

Texture:

Color After:

Clarity After:

Artifacts:

Comments:

TOTAL METALS

INORGANIC ANALYSIS DATA PACKAGE

SDG No.: 22131 Method Type: SW 846

Sample ID: 22131022 Client ID: 065-001000215-30

Contract: BRKL00297 Lab Code: Case No.: SAS No.:

Matrix: SOIL Date Received: 2/19/2000 Level: LOW % Solids: 80.50

CAS No.	Analyte	Concentration	Units	C	Qual	M	DL	Instrument ID	Analytical Run
7429-90-5	Aluminum	1010	mg/kg		E	P	0.75	TJA61 Trace ICP1	31400
7440-36-0	Antimony	0.62	mg/kg	B		P	0.23	TJA61 Trace ICP1	31400
7440-38-2	Arsenic	0.43	mg/kg	B		P	0.24	TJA61 Trace ICP1	31400
7440-39-3	Barium	3.9	mg/kg	B	E	P	0.028	TJA61 Trace ICP1	31400
7440-41-7	Beryllium	0.052	mg/kg	B		P	0.020	TJA61 Trace ICP1	31400
7440-43-9	Cadmium	0.027	mg/kg	U		P	0.027	TJA61 Trace ICP1	31400
7440-70-2	Calcium	279	mg/kg	B	EN	P	0.65	TJA61 Trace ICP1	31400
7440-47-3	Chromium	1.5	mg/kg			P	0.071	TJA61 Trace ICP1	31400
7440-48-4	Cobalt	0.43	mg/kg	B		P	0.078	TJA61 Trace ICP1	31400
7440-50-8	Copper	1.6	mg/kg	B		P	0.12	TJA61 Trace ICP1	31400
7439-89-6	Iron	1360	mg/kg		E	P	0.23	TJA61 Trace ICP1	31400
7439-92-1	Lead	2.1	mg/kg			P	0.13	TJA61 Trace ICP1	31400
7439-95-4	Magnesium	267	mg/kg	B	EN	P	0.87	TJA61 Trace ICP1	31400
7439-96-5	Manganese	31.0	mg/kg		E	P	0.040	TJA61 Trace ICP1	31400
7439-97-6	Mercury	0.0086	mg/kg	U		AV	0.0086	PE CVAA	22800spHg
7440-02-0	Nickel	1.0	mg/kg	B		P	0.13	TJA61 Trace ICP1	31400
7440-09-7	Potassium	77.3	mg/kg	B	N	P	4.8	TJA61 Trace ICP1	31400
7782-49-2	Selenium	0.24	mg/kg	U		P	0.24	TJA61 Trace ICP1	31400
7440-22-4	Silver	0.12	mg/kg	U		P	0.12	TJA61 Trace ICP1	31400
7440-23-5	Sodium	24.4	mg/kg	B		P	0.82	TJA61 Trace ICP1	31400
7440-28-0	Thallium	0.42	mg/kg	U		P	0.42	TJA61 Trace ICP1	31400
7440-62-2	Vanadium	2.9	mg/kg	B	E	P	0.073	TJA61 Trace ICP1	31400
7440-66-6	Zinc	3.7	mg/kg		E	P	0.055	TJA61 Trace ICP1	31400

Color Before: Clarity Before: Texture:

Color After: Clarity After: Artifacts:

Comments:

TOTAL METALS

INORGANIC ANALYSIS DATA PACKAGE

SDG No.: 22131

Method Type: SW 846

Sample ID: 22131023

Client ID: 065-002000215-30

Contract: BRKL00297

Lab Code:

Case No.:

SAS No.:

Matrix: SOIL

Date Received: 2/19/2000

Level: LOW

% Solids: 95.80

CAS No.	Analyte	Concentration	Units	C	Qual	M	DL	Instrument ID	Analytical Run
7429-90-5	Aluminum	1440	mg/kg		E	P	0.65	TJA61 Trace ICP1	31400
7440-36-0	Antimony	0.67	mg/kg	B		P	0.20	TJA61 Trace ICP1	31400
7440-38-2	Arsenic	0.48	mg/kg	B		P	0.21	TJA61 Trace ICP1	31400
7440-39-3	Barium	6.8	mg/kg	B	E	P	0.024	TJA61 Trace ICP1	31400
7440-41-7	Beryllium	0.069	mg/kg	B		P	0.017	TJA61 Trace ICP1	31400
7440-43-9	Cadmium	0.023	mg/kg	U		P	0.023	TJA61 Trace ICP1	31400
7440-70-2	Calcium	119	mg/kg	B	EN	P	0.56	TJA61 Trace ICP1	31400
7440-47-3	Chromium	1.8	mg/kg			P	0.062	TJA61 Trace ICP1	31400
7440-48-4	Cobalt	0.83	mg/kg	B		P	0.068	TJA61 Trace ICP1	31400
7440-50-8	Copper	2.6	mg/kg			P	0.10	TJA61 Trace ICP1	31400
7439-89-6	Iron	2200	mg/kg		E	P	0.20	TJA61 Trace ICP1	31400
7439-92-1	Lead	2.4	mg/kg			P	0.11	TJA61 Trace ICP1	31400
7439-95-4	Magnesium	354	mg/kg	B	EN	P	0.75	TJA61 Trace ICP1	31400
7439-96-5	Manganese	108	mg/kg		E	P	0.034	TJA61 Trace ICP1	31400
7439-97-6	Mercury	0.028	mg/kg	B		AV	0.0068	PE CVAA	22800spHg
7440-02-0	Nickel	1.6	mg/kg	B		P	0.12	TJA61 Trace ICP1	31400
7440-09-7	Potassium	120	mg/kg	B	N	P	4.2	TJA61 Trace ICP1	31400
7782-49-2	Selenium	0.21	mg/kg	U		P	0.21	TJA61 Trace ICP1	31400
7440-22-4	Silver	0.13	mg/kg	B		P	0.11	TJA61 Trace ICP1	31400
7440-23-5	Sodium	21.3	mg/kg	B		P	0.71	TJA61 Trace ICP1	31400
7440-28-0	Thallium	0.36	mg/kg	U		P	0.36	TJA61 Trace ICP1	31400
7440-62-2	Vanadium	3.2	mg/kg	B	E	P	0.063	TJA61 Trace ICP1	31400
7440-66-6	Zinc	5.1	mg/kg		E	P	0.047	TJA61 Trace ICP1	31400

Color Before:

Clarity Before:

Texture:

Color After:

Clarity After:

Artifacts:

Comments:

TOTAL METALS

INORGANIC ANALYSIS DATA PACKAGE

SDG No.: 22131 Method Type: SW 846

Sample ID: 22131024 Client ID: 065-003000215-30

Contract: BRKL00297 Lab Code: Case No.: SAS No.:

Matrix: SOIL Date Received: 2/19/2000 Level: LOW % Solids: 96.20

CAS No.	Analyte	Concentration	Units	C	Qual	M	DL	Instrument ID	Analytical Run
7429-90-5	Aluminum	664	mg/kg		E	P	0.66	TJA61 Trace ICP1	31400
7440-36-0	Antimony	0.77	mg/kg	B		P	0.20	TJA61 Trace ICP1	31400
7440-38-2	Arsenic	0.34	mg/kg	B		P	0.21	TJA61 Trace ICP1	31400
7440-39-3	Barium	2.4	mg/kg	B	E	P	0.024	TJA61 Trace ICP1	31400
7440-41-7	Beryllium	0.042	mg/kg	B		P	0.017	TJA61 Trace ICP1	31400
7440-43-9	Cadmium	0.023	mg/kg	U		P	0.023	TJA61 Trace ICP1	31400
7440-70-2	Calcium	101	mg/kg	B	EN	P	0.56	TJA61 Trace ICP1	31400
7440-47-3	Chromium	1.3	mg/kg			P	0.062	TJA61 Trace ICP1	31400
7440-48-4	Cobalt	0.43	mg/kg	B		P	0.068	TJA61 Trace ICP1	31400
7440-50-8	Copper	1.8	mg/kg	B		P	0.10	TJA61 Trace ICP1	31400
7439-89-6	Iron	1200	mg/kg		E	P	0.20	TJA61 Trace ICP1	31400
7439-92-1	Lead	1.2	mg/kg			P	0.11	TJA61 Trace ICP1	31400
7439-95-4	Magnesium	179	mg/kg	B	EN	P	0.76	TJA61 Trace ICP1	31400
7439-96-5	Manganese	31.4	mg/kg		E	P	0.034	TJA61 Trace ICP1	31400
7439-97-6	Mercury	0.013	mg/kg	B		AV	0.0062	PE CVAA	22800spHg
7440-02-0	Nickel	0.84	mg/kg	B		P	0.12	TJA61 Trace ICP1	31400
7440-09-7	Potassium	53.7	mg/kg	B	N	P	4.2	TJA61 Trace ICP1	31400
7782-49-2	Selenium	0.21	mg/kg	U		P	0.21	TJA61 Trace ICP1	31400
7440-22-4	Silver	0.11	mg/kg	B		P	0.11	TJA61 Trace ICP1	31400
7440-23-5	Sodium	12.6	mg/kg	B		P	0.71	TJA61 Trace ICP1	31400
7440-28-0	Thallium	0.36	mg/kg	U		P	0.36	TJA61 Trace ICP1	31400
7440-62-2	Vanadium	2.0	mg/kg	B	E	P	0.064	TJA61 Trace ICP1	31400
7440-66-6	Zinc	2.5	mg/kg		E	P	0.048	TJA61 Trace ICP1	31400

Color Before: Clarity Before: Texture:

Color After: Clarity After: Artifacts:

Comments:

TOTAL METALS

- 1 -

INORGANIC ANALYSIS DATA PACKAGE

SDG No.: 22131

Method Type: SW 846

Sample ID: 22131025

Client ID: 065-004000215-30

Contract: BRKL00297

Lab Code:

Case No.:

SAS No.:

Matrix: SOIL

Date Received: 2/19/2000

Level: LOW

% Solids: 91.40

CAS No.	Analyte	Concentration	Units	C	Qual	M	DL	Instrument ID	Analytical Run
7429-90-5	Aluminum	3590	mg/kg		E	P	0.69	TJA61 Trace ICP1	31400
7440-36-0	Antimony	0.29	mg/kg	B		P	0.21	TJA61 Trace ICP1	31400
7440-38-2	Arsenic	1.0	mg/kg	B		P	0.22	TJA61 Trace ICP1	31400
7440-39-3	Barium	8.9	mg/kg	B	E	P	0.025	TJA61 Trace ICP1	31400
7440-41-7	Beryllium	0.12	mg/kg	B		P	0.018	TJA61 Trace ICP1	31400
7440-43-9	Cadmium	0.024	mg/kg	U		P	0.024	TJA61 Trace ICP1	31400
7440-70-2	Calcium	250	mg/kg	B	EN	P	0.59	TJA61 Trace ICP1	31400
7440-47-3	Chromium	3.8	mg/kg			P	0.065	TJA61 Trace ICP1	31400
7440-48-4	Cobalt	1.1	mg/kg	B		P	0.071	TJA61 Trace ICP1	31400
7440-50-8	Copper	3.1	mg/kg			P	0.11	TJA61 Trace ICP1	31400
7439-89-6	Iron	3700	mg/kg		E	P	0.21	TJA61 Trace ICP1	31400
7439-92-1	Lead	4.4	mg/kg			P	0.11	TJA61 Trace ICP1	31400
7439-95-4	Magnesium	424	mg/kg	B	EN	P	0.80	TJA61 Trace ICP1	31400
7439-96-5	Manganese	45.8	mg/kg		E	P	0.036	TJA61 Trace ICP1	31400
7439-97-6	Mercury	0.018	mg/kg	B		AV	0.0074	PE CVAA	22800spHg
7440-02-0	Nickel	2.1	mg/kg	B		P	0.12	TJA61 Trace ICP1	31400
7440-09-7	Potassium	145	mg/kg	B	N	P	4.4	TJA61 Trace ICP1	31400
7782-49-2	Selenium	0.22	mg/kg	U		P	0.22	TJA61 Trace ICP1	31400
7440-22-4	Silver	0.11	mg/kg	U		P	0.11	TJA61 Trace ICP1	31400
7440-23-5	Sodium	39.7	mg/kg	B		P	0.75	TJA61 Trace ICP1	31400
7440-28-0	Thallium	0.38	mg/kg	U		P	0.38	TJA61 Trace ICP1	31400
7440-62-2	Vanadium	6.6	mg/kg		E	P	0.067	TJA61 Trace ICP1	31400
7440-66-6	Zinc	8.4	mg/kg		E	P	0.050	TJA61 Trace ICP1	31400

Color Before:

Clarity Before:

Texture:

Color After:

Clarity After:

Artifacts:

Comments:

GENERAL ENGINEERING LABORATORIES

Meeting today's needs with a vision for tomorrow.

Certificate of Analysis

Company : Brookhaven National Laboratory
Address : OER
Building 51M
Upton, NY 11973-5000
Contact: Ms. Anna Bou
Project: Routine Analytical

Report Date: March 30, 2000

Client Sample ID: 065-001000215-36
Sample ID: 22131003
Matrix: Soil
Collect Date: 15-FEB-00 13:54 3/30/00 COC: 6362
Receive Date: 19-FEB-00 09:00 3/30/00
Collector: Client

Project: BRKL00297
Client ID: BRKL001

Parameter	Qualifier	Result		DL	RL	Units	DF	Analyst	Date	Time	Batch	Method
Rad Alpha Spec												
Alphaspec Am241, Cm, solid												
Americium-241	U	0.00764	+/-0.0153	0.0229	1.00	pCi/g	1	CLC	03/13/00	1120	13936	1
Alphaspec Pu, solid												
Plutonium-238	UJ-K	0.00553	+/-0.116	0.297	6.60	pCi/g	1	CLC	03/13/00	1108	13928	2
Plutonium-239/240	UJ-K	0.00079	+/-0.0438	0.149	4.00	pCi/g	1					
Alphaspec Th, solid												
Thorium-228		0.286	+/-0.146	0.213	1.00	pCi/g	1	CLC	03/11/00	1830	13923	3
Thorium-230		0.654	+/-0.179	0.105	1.00	pCi/g	1					
Thorium-232		0.200	+/-0.0881	0.0536	1.00	pCi/g	1					
Alphaspec U, solid												
Uranium-233/234	UJ-K	0.0871	+/-0.106	0.139	0.900	pCi/g	1	CLC	03/09/00	2115	13912	4
Uranium-235/236	U	-0.00364	+/-0.0073	0.140	0.900	pCi/g	1					
Uranium-238		0.151	+/-0.137	0.0907	0.900	pCi/g	1					
Rad Gamma Spec												
Gamma I129, solid												
Iodine-129	UJ-K	0.200	+/-0.128	0.205	1.00	pCi/g	1	SRB	03/13/00	1434	15174	5
Gammaspec, Gamma, solid												
Americium-241	UJ-K	0.00697	+/-0.0926	0.160	4.00	pCi/g	1	SRB	03/09/00	2133	15150	6
Beryllium-7	U	-0.0478	+/-0.165	0.299	1.00	pCi/g	1					
Cesium-134	U	-0.000242	+/-0.0169	0.0271	0.100	pCi/g	1					
Cesium-137	UJ-K	0.0173	+/-0.0242	0.0297	2.30	pCi/g	1					
Cobalt-57	U	0.00649	+/-0.0127	0.0195	0.100	pCi/g	1					
Cobalt-60	UJ-K	-0.000965	+/-0.0155	0.0294	0.100	pCi/g	1					
Europium-152	U	-0.0324	+/-0.045	0.0742	4.80	pCi/g	1					
Europium-154	UJ-K	0.0334	+/-0.0342	0.0991	17.0	pCi/g	1					
Europium-155	UJ-K	0.0236	+/-0.042	0.0801	0.200	pCi/g	1					
Manganese-54	U	0.0069	+/-0.017	0.0319	0.100	pCi/g	1					
Radium-226		0.275	+/-0.0743	0.0521	1.00	pCi/g	1					
Sodium-22	UJ-	0.012	+/-0.0123	0.0344	0.700	pCi/g	1					

P O Box 30712 • Charleston, SC 29417 • 2040 Savage Road • 29407

GENERAL ENGINEERING LABORATORIES

Meeting today's needs with a vision for tomorrow.

Certificate of Analysis

Company : Brookhaven National Laboratory
Address : OER
Building 51M
Upton, NY 11973-5000
Contact: Ms. Anna Bou
Project: Routine Analytical

Report Date: March 30, 2000

Client Sample ID: 065-001000215-36
Sample ID: 22131003

Project: BRKL00297
Client ID: BRKL001

Parameter	Qualifier	Result		DL	RL	Units	DF	Analyst	Date	Time	Batch	Method
Rad Gamma Spec												
Gammaspec, Gamma, solid												
Vanadium-48	K UJ-K	0.00505	+/-0.0417	0.0768	1.00	pCi/g	1					
Zinc-65	UJ-K	-0.00547	+/-0.0387	0.0626	0.200	pCi/g	1					
Rad Gas Flow												
GFPC, Gross A/B, solid												
Alpha		2.64	+/-0.755	0.790	1.00	pCi/g	1	JDM	03/17/00	1938	13414	7
Beta		3.98	+/-1.10	1.68	1.00	pCi/g	1					
GFPC, Sr90, solid												
Strontium-90	UJ-K	-0.742	+/-0.999	2.79	7.50	pCi/g	1	AAK	03/09/00	1855	14213	8
Rad Liquid Scint												
LSC, Tritium Vacuum, solid												
Tritium	U	0.290	+/-1.09	1.89	2.00	pCi/g	1	AEA	03/13/00	1822	15504	9
Liquid Scint C14, solid												
Carbon-14	U	0.0725	+/-0.128	0.217	1.00	pCi/g	1	KDA	03/16/00	1215	12078	10
Liquid Scint Ni63, solid												
Nickel-63	U	0.800	+/-1.88	4.58	2.00	pCi/g	1	AEA	03/21/00	0803	14568	11
Liquid Scint Tc99, solid												
Technetium-99	U	0.0346	+/-0.588	1.43	5.00	pCi/g	1	AEA	03/13/00	1533	13514	12

The following Prep Methods were performed

Method	Description	Analyst	Date	Time	Prep Batch
Ash Soil Prep	Ash Soil Prep EPI A-021,A-021B,A-026	TCI	02/24/00	0952	13395
Dry Soil Prep	Dry Soil Prep EPI A-021,A-021B,A-026	CRS	02/23/00	1027	13128

The following Analytical Methods were performed

Method	Description
1	DOE EML HASL 300
2	DOE EML HASL 300
3	DOE EML HASL 300
4	DOE EML HASL 300
5	LANL EM-9
6	DOE EML HASL 300
7	EPA 900

GENERAL ENGINEERING LABORATORIES

Meeting today's needs with a vision for tomorrow.

Certificate of Analysis

Company : Brookhaven National Laboratory
Address : OER
Building 51M
Upton, NY 11973-5000
Contact: Ms. Anna Bou
Project: Routine Analytical

Report Date: March 30, 2000

Client Sample ID: 065-001000215-36
Sample ID: 22131003

Project: BRKL00297
Client ID: BRKL001

Parameter	Qualifier	Result	DL	RL	Units	DF	AnalystDate	Time	Batch	Method
8	EPA 905.0									
9	EPA 906.0									
10	EPA 504.1									
11	DOE RESL Ni-1									
12	DOE EML HASL 300									

Notes:
The Qualifiers in this report are defined as follows :

DL Failed required detection limit.
RI Not quantified due to interference.
U Sample result < .5*MDA and MDA <= RDL.
UJ .5*MDA < Sample result < MDA and MDA <= RDL.
UJ-Q Not quantified due to low abundance.

The above sample is reported on an "as received" basis.

This data report has been prepared and reviewed in accordance with General Engineering Laboratories, Inc. standard operating procedures. Please direct any questions to your Project Manager, Nancy Slater at 843-556-8171 Ext. 4438.

Wanda C Jennes
Reviewed by

P O Box 30712 •Charleston, SC 29417 •2040 Savage Road •29407
(843) 556-8171 • Fax (843) 766-1178

GENERAL ENGINEERING LABORATORIES

Meeting today's needs with a vision for tomorrow.

Certificate of Analysis

Company : Brookhaven National Laboratory
Address : OER
Building 51M
Upton, NY 11973-5000
Contact: Ms. Anna Bou
Project: Routine Analytical

Report Date: March 30, 2000

Client Sample ID: 065-002000215-36
Sample ID: 22131004
Matrix: Soil
Collect Date: 15-FEB-00 13:57 3/30/00 WLT
Receive Date: 19-FEB-00 09:00 3/30/00 WLT
Collector: Client

Project: BRKL00297
Client ID: BRKL001
CEC : 6362 3/20/00 WLT

Parameter	Qualifier	Result		DL	RL	Units	DF	Analyst	Date	Time	Batch	Method
Rad Alpha Spec												
Alphaspec Am241, Cm, solid												
Americium-241	U	0.00775	+/-0.0155	0.0232	1.00	pCi/g	1	CLC	03/13/00	1120	13936	1
Alphaspec Pu, solid												
Plutonium-238	UJ-K	0.0338	+/-0.123	0.291	6.60	pCi/g	1	CLC	03/13/00	1108	13928	2
Plutonium-239/240	UJ-K	0.0195	+/-0.0562	0.142	4.00	pCi/g	1					
Alphaspec Th, solid												
Thorium-228		0.236	+/-0.140	0.218	1.00	pCi/g	1	CLC	03/11/00	1830	13923	3
Thorium-230		0.257	+/-0.107	0.099	1.00	pCi/g	1					
Thorium-232		0.219	+/-0.0912	0.0253	1.00	pCi/g	1					
Alphaspec U, solid												
Uranium-233/234		0.242	+/-0.183	0.183	0.900	pCi/g	1	CLC	03/09/00	2115	13912	4
Uranium-235/236	U	-0.00381	+/-0.00764	0.146	0.900	pCi/g	1					
Uranium-238	UJ	0.0633	+/-0.090	0.0949	0.900	pCi/g	1					
Rad Gamma Spec												
Gamma I129, solid												
Iodine-129	UJ-K	0.0126	+/-0.206	0.209	1.00	pCi/g	1	SRB	03/14/00	1259	15174	5
Gammaspec, Gamma, solid												
Americium-241	UJ-K	0.0332	+/-0.0625	0.107	4.00	pCi/g	1	SRB	03/09/00	1659	15150	6
Beryllium-7	U	-0.0126	+/-0.186	0.284	1.00	pCi/g	1					
Cesium-134	U	0.00826	+/-0.0192	0.0228	0.100	pCi/g	1					
Cesium-137		0.0401	+/-0.0259	0.0317	2.30	pCi/g	1					
Cobalt-57	U	0.00065	+/-0.0113	0.0202	0.100	pCi/g	1					
Cobalt-60	UJ-K	0.00311	+/-0.0184	0.0302	0.100	pCi/g	1					
Europium-152	U	-0.0072	+/-0.039	0.0696	4.80	pCi/g	1					
Europium-154	UJ-K	-0.00972	+/-0.0449	0.0813	17.0	pCi/g	1					
Europium-155	UJ-K	0.044	+/-0.0455	0.0844	0.200	pCi/g	1					
Manganese-54	U	0.00827	+/-0.0156	0.0294	0.100	pCi/g	1					
Radium-226		0.341	+/-0.0745	0.0513	1.00	pCi/g	1					
Sodium-22	UJ-K	-0.00333	+/-0.0162	0.0293	0.700	pCi/g	1					
Vanadium-48	UJ-	0.0236	+/-0.0416	0.0786	1.00	pCi/g	1					

P O Box 30712 •Charleston, SC 29417 •2040 Savage Road •29407
(843) 556-8171 •Fax (843) 766-1178

GENERAL ENGINEERING LABORATORIES

Meeting today's needs with a vision for tomorrow.

Certificate of Analysis

Company : Brookhaven National Laboratory
Address : OER
Building 51M
Upton, NY 11973-5000
Contact: Ms. Anna Bou
Project: Routine Analytical

Report Date: March 30, 2000

Client Sample ID: 065-002000215-36
Sample ID: 22131004

Project: BRKL00297
Client ID: BRKL001

Parameter	Qualifier	Result		DL	RL	Units	DF	Analyst	Date	Time	Batch	Method
Rad Gamma Spec												
Gammaspec, Gamma, solid												
Zinc-65	K UJ-K	-0.0161	+/-0.0421	0.0637	0.200	pCi/g	1					
Rad Gas Flow												
GFPC, Gross A/B, solid												
Alpha		3.74	+/-1.08	1.37	1.00	pCi/g	1	JDM	03/17/00	1938	13414	7
Beta		4.82	+/-1.56	2.46	1.00	pCi/g	1					
GFPC, Sr90, solid												
Strontium-90	UJ-K	-0.736	+/-0.712	2.22	7.50	pCi/g	1	AAK	03/09/00	1855	14213	8
Rad Liquid Scint												
LSC, Tritium Vacuum, solid												
Tritium	U	0.290	+/-1.09	1.89	2.00	pCi/g	1	AEA	03/13/00	1953	15504	9
Liquid Scint C14, solid												
Carbon-14		0.274	+/-0.137	0.221	1.00	pCi/g	1	KDA	03/16/00	1247	12078	10
Liquid Scint Ni63, solid												
Nickel-63	U	0.475	+/-2.03	4.95	2.00	pCi/g	1	AEA	03/21/00	0850	14568	11
Liquid Scint Tc99, solid												
Technetium-99	U	0.213	+/-0.383	0.884	5.00	pCi/g	1	AEA	03/13/00	1605	13514	12

The following Prep Methods were performed

Method	Description	Analyst	Date	Time	Prep Batch
Ash Soil Prep	Ash Soil Prep EPI A-021,A-021B,A-026	TC1	02/24/00	0952	13395
Dry Soil Prep	Dry Soil Prep EPI A-021,A-021B,A-026	CRS	02/23/00	1027	13128

The following Analytical Methods were performed

Method	Description
1	DOE EML HASL 300
2	DOE EML HASL 300
3	DOE EML HASL 300
4	DOE EML HASL 300
5	LANL EM-9
6	DOE EML HASL 300
7	EPA 900
8	EPA 905.0
9	EPA 906.0

P O Box 30712 • Charleston, SC 29417 • 2040 Savage Road • 29407
(843) 556-8171 • Fax (843) 766-1178

GENERAL ENGINEERING LABORATORIES

Meeting today's needs with a vision for tomorrow.

Certificate of Analysis

Company : Brookhaven National Laboratory
Address : OER
Building 51M
Upton, NY 11973-5000
Contact: Ms. Anna Bou
Project: Routine Analytical

Report Date: March 30, 2000

Client Sample ID: 065-002000215-36
Sample ID: 22131004

Project: BRKL00297
Client ID: BRKL001

Parameter	Qualifier	Result	DL	RL	Units	DF	AnalystDate	Time	Batch	Method
10	EPA 504.1									
11	DOE RESL Ni-1									
12	DOE EML HASL 300									

Notes:
The Qualifiers in this report are defined as follows :

DL Failed required detection limit.
RI Not quantified due to interference.
U Sample result < .5*MDA and MDA <= RDL.
UJ .5*MDA < Sample result < MDA and MDA <= RDL.
UJ-Q Not quantified due to low abundance.

The above sample is reported on an "as received" basis.

This data report has been prepared and reviewed in accordance with General Engineering Laboratories, Inc. standard operating procedures. Please direct any questions to your Project Manager, Nancy Slater at 843-556-8171 Ext. 4438.

Wanda C Jennes
Reviewed by

P O Box 30712 •Charleston, SC 29417 •2040 Savage Road •29407

GENERAL ENGINEERING LABORATORIES

Meeting today's needs with a vision for tomorrow.

Certificate of Analysis

Company : Brookhaven National Laboratory
Address : OER
Building 51M
Upton, NY 11973-5000
Contact: Ms. Anna Bou
Project: Routine Analytical

Report Date: March 30, 2000

Client Sample ID: 065-003000215-36
Sample ID: 22131005
Matrix: Soil
Collect Date: 15-FEB-00 14:10
Receive Date: 19-FEB-00 09:00
Collector: Client

Project: BRKL00297
Client ID: BRKL001

COC: 6362

Parameter	Qualifier	Result		DL	RL	Units	DF	Analyst	Date	Time	Batch	Method
Rad Alpha Spec												
Alphaspec Am241, Cm, solid												
Americium-241	U	0.0137	+/-0.027	0.0563	1.00	pCi/g	1	CLC	03/13/00	1120	13936	1
Alphaspec Pu, solid												
Plutonium-238	UJ-K	0.137	+/-0.150	0.275	6.60	pCi/g	1	CLC	03/13/00	1108	13928	2
Plutonium-239/240	UJ-K	0.0272	+/-0.0628	0.147	4.00	pCi/g	1					
Alphaspec Th, solid												
Thorium-228		0.313	+/-0.145	0.199	1.00	pCi/g	1	CLC	03/11/00	1830	13923	3
Thorium-230		0.244	+/-0.0995	0.0723	1.00	pCi/g	1					
Thorium-232		0.273	+/-0.103	0.0249	1.00	pCi/g	1					
Alphaspec U, solid												
Uranium-233/234	UJ-K	0.110	+/-0.129	0.221	0.900	pCi/g	1	CLC	03/09/00	2115	13912	4
Uranium-235/236	U	0.0678	+/-0.0995	0.187	0.900	pCi/g	1					
Uranium-238	UJ	0.114	+/-0.128	0.213	0.900	pCi/g	1					
Rad Gamma Spec												
Gamma I129, solid												
Iodine-129	UJ-K	0.0581	+/-0.162	0.231	1.00	pCi/g	1	SRB	03/14/00	1432	15174	5
Gammaspec, Gamma, solid												
Americium-241	UJ-K	-0.101	+/-0.0677	0.0952	4.00	pCi/g	1	SRB	03/09/00	1659	15150	6
Beryllium-7	U	0.0595	+/-0.149	0.281	1.00	pCi/g	1					
Cesium-134	U	-0.0323	+/-0.0166	0.0247	0.100	pCi/g	1					
Cesium-137		0.0831	+/-0.0233	0.0303	2.30	pCi/g	1					
Cobalt-57	U	-0.00498	+/-0.010	0.0181	0.100	pCi/g	1					
Cobalt-60	UJ-K	0.00548	+/-0.0178	0.0341	0.100	pCi/g	1					
Europium-152	U	-0.014	+/-0.0475	0.0713	4.80	pCi/g	1					
Europium-154	UJ-K	-0.0145	+/-0.0422	0.0755	17.0	pCi/g	1					
Europium-155	UJ-K	0.0412	+/-0.0396	0.0765	0.200	pCi/g	1					
Manganese-54	U	0.00495	+/-0.0153	0.0283	0.100	pCi/g	1					
Radium-226		0.278	+/-0.0677	0.050	1.00	pCi/g	1					
Sodium-22	UJ-K	-0.00512	+/-0.0152	0.0272	0.700	pCi/g	1					

P O Box 30712 • Charleston, SC 29417 • 2040 Savage Road • 29407
(843) 556-8171 • Fax (843) 766-1178

GENERAL ENGINEERING LABORATORIES

Meeting today's needs with a vision for tomorrow.

Certificate of Analysis

Company : Brookhaven National Laboratory
Address : OER
Building 51M
Upton, NY 11973-5000
Contact: Ms. Anna Bou
Project: Routine Analytical

Report Date: March 30, 2000

Client Sample ID: 065-003000215-36
Sample ID: 22131005

Project: BRKL00297
Client ID: BRKL001

Parameter	Qualifier	Result		DL	RL	Units	DF	Analyst	Date	Time	Batch	Method
Rad Gamma Spec												
Gammaspec, Gamma, solid												
Vanadium-48	UJ-K	0.0198	+/-0.0299	0.0655	1.00	pCi/g	1					
Zinc-65	UJ-K	-0.00445	+/-0.0425	0.0672	0.200	pCi/g	1					
Rad Gas Flow												
GFPC, Gross A/B, solid												
Alpha		3.57	+/-0.861	0.716	1.00	pCi/g	1	JDM	03/17/00	1938	13414	7
Beta		5.29	+/-1.27	1.89	1.00	pCi/g	1					
GFPC, Sr90, solid												
Strontium-90	UJ-K	0.0029	+/-1.31	3.34	7.50	pCi/g	1	AAK	03/09/00	1855	14213	8
Rad Liquid Scint												
LSC, Tritium Vacuum, solid												
Tritium	U	-0.293	+/-1.06	1.91	2.00	pCi/g	1	AEA	03/13/00	2124	15504	9
Liquid Scint C14, solid												
Carbon-14	U	0.0985	+/-0.133	0.224	1.00	pCi/g	1	KDA	03/16/00	1319	12078	10
Liquid Scint Ni63, solid												
Nickel-63	U	-0.781	+/-3.57	8.71	2.00	pCi/g	1	AEA	03/21/00	0937	14568	11
Liquid Scint Tc99, solid												
Technetium-99	U	0.245	+/-0.809	1.92	5.00	pCi/g	1	AEA	03/13/00	1637	13514	12

The following Prep Methods were performed

Method	Description	Analyst	Date	Time	Prep Batch
Ash Soil Prep	Ash Soil Prep EPI A-021,A-021B,A-026	TC1	02/24/00	0952	13395
Dry Soil Prep	Dry Soil Prep EPI A-021,A-021B,A-026	CRS	02/23/00	1027	13128

The following Analytical Methods were performed

Method	Description
1	DOE EML HASL 300
2	DOE EML HASL 300
3	DOE EML HASL 300
4	DOE EML HASL 300
5	LANL EM-9
6	DOE EML HASL 300
7	EPA 900
8	EPA 905.0

GENERAL ENGINEERING LABORATORIES

Meeting today's needs with a vision for tomorrow.

Certificate of Analysis

Company : Brookhaven National Laboratory
Address : OER
Building 51M
Upton, NY 11973-5000
Contact: Ms. Anna Bou
Project: Routine Analytical

Report Date: March 30, 2000

Client Sample ID: 065-003000215-36
Sample ID: 22131005

Project: BRKL00297
Client ID: BRKL001

Parameter	Qualifier	Result	DL	RL	Units	DF	AnalystDate	Time	Batch	Method
9	EPA 906.0									
10	EPA 504.1									
11	DOE RESL Ni-1									
12	DOE EML HASL 300									

Notes:
The Qualifiers in this report are defined as follows :

DL Failed required detection limit.
RI Not quantified due to interference.
U Sample result < .5*MDA and MDA <= RDL.
UJ .5*MDA < Sample result < MDA and MDA <= RDL.
UJ-Q Not quantified due to low abundance.

The above sample is reported on an "as received" basis.

This data report has been prepared and reviewed in accordance with General Engineering Laboratories, Inc. standard operating procedures. Please direct any questions to your Project Manager, Nancy Slater at 843-556-8171 Ext. 4438.

Wanda C Jennes
Reviewed by

P O Box 30712 • Charleston, SC 29417 • 2040 Savage Road • 29407
(843) 556-8171 • Fax (843) 766-1178

GENERAL ENGINEERING LABORATORIES

Meeting today's needs with a vision for tomorrow.

Certificate of Analysis

Company : Brookhaven National Laboratory
Address : OER
Building 51M
Upton, NY 11973-5000
Contact: Ms. Anna Bou
Project: Routine Analytical

Report Date: March 30, 2000

Client Sample ID: 065-005000215-30
Sample ID: 22131006
Matrix: Soil
Collect Date: 15-FEB-00 10:55 3/30/00 COC: 6361
Receive Date: 19-FEB-00 09:00 3/30/00
Collector: Client

Project: BRKL00297
Client ID: BRKL001

Parameter	Qualifier	Result		DL	RL	Units	DF	Analyst	Date	Time	Batch	Method
Rad Alpha Spec												
Alphaspec Am241, Cm, solid												
Americium-241	U	0.00857	+/-0.0259	0.0623	1.00	pCi/g	1	CLC	03/13/00	1120	13936	1
Alphaspec Pu, solid												
Plutonium-238	UJ-K	0.0421	+/-0.103	0.233	6.60	pCi/g	1	CLC	03/13/00	1108	13928	2
Plutonium-239/240	UJ-K	0.000601	+/-0.0334	0.114	4.00	pCi/g	1					
Alphaspec Th, solid												
Thorium-228	UJ	0.158	+/-0.110	0.169	1.00	pCi/g	1	CLC	03/11/00	1913	13923	3
Thorium-230		0.280	+/-0.114	0.0741	1.00	pCi/g	1					
Thorium-232		0.232	+/-0.101	0.029	1.00	pCi/g	1					
Alphaspec U, solid												
Uranium-233/234	UJ-K	0.0135	+/-0.0536	0.162	0.900	pCi/g	1	CLC	03/09/00	2115	13912	4
Uranium-235/236	U	0.0491	+/-0.0745	0.120	0.900	pCi/g	1					
Uranium-238		0.130	+/-0.118	0.0781	0.900	pCi/g	1					
Rad Gamma Spec												
Gamma I129, solid												
Iodine-129	UJ-K	-0.017	+/-0.164	0.218	1.00	pCi/g	1	SRB	03/14/00	1648	15174	5
Gammaspec, Gamma, solid												
Americium-241	UJ-K	0.00487	+/-0.0994	0.166	4.00	pCi/g	1	SRB	03/09/00	1700	15150	6
Beryllium-7	U	-0.0275	+/-0.108	0.202	1.00	pCi/g	1					
Cesium-134	U	-0.00474	+/-0.0135	0.0211	0.100	pCi/g	1					
Cesium-137	UJ-K	-0.00497	+/-0.012	0.0215	2.30	pCi/g	1					
Cobalt-57	U	0.00136	+/-0.0086	0.0166	0.100	pCi/g	1					
Cobalt-60	UJ-K	0.0188	+/-0.0144	0.0313	0.100	pCi/g	1					
Europium-152	U	-0.0245	+/-0.0359	0.0611	4.80	pCi/g	1					
Europium-154	UJ-K	-0.00564	+/-0.0431	0.0799	17.0	pCi/g	1					
Europium-155	UJ-K	-0.00608	+/-0.0364	0.0698	0.200	pCi/g	1					
Manganese-54	U	0.0107	+/-0.0155	0.0225	0.100	pCi/g	1					
Radium-226		0.280	+/-0.0715	0.0435	1.00	pCi/g	1					
Sodium-22	UJ-	-0.00199	+/-0.0155	0.0288	0.700	pCi/g	1					

P O Box 30712 •Charleston, SC 29417 •2040 Savage Road •29407
(843) 556-8171 • Fax (843) 766-1178

GENERAL ENGINEERING LABORATORIES

Meeting today's needs with a vision for tomorrow.

Certificate of Analysis

Company : Brookhaven National Laboratory
Address : OER
Building 51M
Upton, NY 11973-5000
Contact: Ms. Anna Bou
Project: Routine Analytical

Report Date: March 30, 2000

Client Sample ID: 065-005000215-30
Sample ID: 22131006

Project: BRKL00297
Client ID: BRKL001

Parameter	Qualifier	Result		DL	RL	Units	DF	Analyst	Date	Time	Batch	Method
Rad Gamma Spec												
Gammaspec, Gamma, solid												
Vanadium-48	K UJ-K	-0.0223	+/-0.0364	0.061	1.00	pCi/g	1					
Zinc-65	UJ-K	-0.00933	+/-0.0323	0.0557	0.200	pCi/g	1					
Rad Gas Flow												
GFPC, Gross A/B, solid												
Alpha	UJ	0.853	+/-0.787	1.20	1.00	pCi/g	1	JDM	03/17/00	1938	13414	7
Beta		8.31	+/-1.28	1.74	1.00	pCi/g	1					
GFPC, Sr90, solid												
Strontium-90	UJ-K	-0.357	+/-1.36	3.61	7.50	pCi/g	1	AAK	03/09/00	1855	14213	8
Rad Liquid Scint												
LSC, Tritium Vacuum, solid												
Tritium	U	-0.385	+/-1.21	2.16	2.00	pCi/g	1	AEA	03/16/00	0034	15504	9
Liquid Scint C14, solid												
Carbon-14	U	0.081	+/-0.130	0.219	1.00	pCi/g	1	KDA	03/16/00	1351	12078	10
Liquid Scint Ni63, solid												
Nickel-63	U	0.860	+/-2.33	5.68	2.00	pCi/g	1	AEA	03/21/00	1025	14568	11
Liquid Scint Tc99, solid												
Technetium-99	U	-0.105	+/-0.465	1.17	5.00	pCi/g	1	AEA	03/13/00	1710	13514	12

The following Prep Methods were performed

Method	Description	Analyst	Date	Time	Prep Batch
Ash Soil Prep	Ash Soil Prep EPI A-021,A-021B,A-026	TC1	02/24/00	0952	13395
Dry Soil Prep	Dry Soil Prep EPI A-021,A-021B,A-026	CRS	02/23/00	1027	13128

The following Analytical Methods were performed

Method	Description
1	DOE EML HASL 300
2	DOE EML HASL 300
3	DOE EML HASL 300
4	DOE EML HASL 300
5	LANL EM-9
6	DOE EML HASL 300
7	EPA 900

P O Box 30712 •Charleston, SC 29417 •2040 Savage Road •29407

GENERAL ENGINEERING LABORATORIES

Meeting today's needs with a vision for tomorrow.

Certificate of Analysis

Company : Brookhaven National Laboratory
Address : OER
Building 51M
Upton, NY 11973-5000
Contact: Ms. Anna Bou
Project: Routine Analytical

Report Date: March 30, 2000

Client Sample ID: 065-005000215-30
Sample ID: 22131006

Project: BRKL00297
Client ID: BRKL001

Parameter	Qualifier	Result	DL	RL	Units	DF	AnalystDate	Time	Batch	Method
8	EPA 905.0									
9	EPA 906.0									
10	EPA 504.1									
11	DOE RESL Ni-1									
12	DOE EML HASL 300									

Notes:
The Qualifiers in this report are defined as follows :

DL Failed required detection limit.
RI Not quantified due to interference.
U Sample result < .5*MDA and MDA <= RDL.
UJ .5*MDA < Sample result < MDA and MDA <= RDL.
UJ-Q Not quantified due to low abundance.

The above sample is reported on an "as received" basis.

This data report has been prepared and reviewed in accordance with General Engineering Laboratories, Inc. standard operating procedures. Please direct any questions to your Project Manager, Nancy Slater at 843-556-8171 Ext. 4438.

Wanda C Jenrres
Reviewed by

P O Box 30712 •Charleston, SC 29417 •2040 Savage Road •29407
(843) 556-8171 •Fax (843) 766-1178

GENERAL ENGINEERING LABORATORIES

Meeting today's needs with a vision for tomorrow.

Certificate of Analysis

Company : Brookhaven National Laboratory
Address : OER
Building 51M
Upton, NY 11973-5000
Contact: Ms. Anna Bou
Project: Routine Analytical

Report Date: March 30, 2000

Client Sample ID: 065-006000215-30
Sample ID: 22131007
Matrix: Soil
Collect Date: 15-FEB-00 11:05 3/30/00 WCT
Receive Date: 19-FEB-00 09:00 3/30/00 WCT
Collector: Client

Project: BRKL00297
Client ID: BRKL001
COC: 6361
3/30/00 WCT

Parameter	Qualifier	Result		DL	RL	Units	DF	Analyst	Date	Time	Batch	Method
Rad Alpha Spec												
Alphaspec Am241, Cm, solid												
Americium-241		0.0427	+/-0.0385	0.0256	1.00	pCi/g	1	CLC	03/13/00	1120	13936	1
Alphaspec Pu, solid												
Plutonium-238	UJ-K	-0.022	+/-0.103	0.278	6.60	pCi/g	1	CLC	03/13/00	1108	13928	2
Plutonium-239/240	UJ-K	0.000645	+/-0.0358	0.122	4.00	pCi/g	1					
Alphaspec Th, solid												
Thorium-228	U	0.0689	+/-0.0978	0.185	1.00	pCi/g	1	CLC	03/11/00	1913	13923	3
Thorium-230		0.185	+/-0.0924	0.0748	1.00	pCi/g	1					
Thorium-232	UJ-K	0.0486	+/-0.0502	0.0748	1.00	pCi/g	1					
Alphaspec U, solid												
Uranium-233/234		0.150	+/-0.140	0.142	0.900	pCi/g	1	CLC	03/09/00	2100	13912	4
Uranium-235/236	U	0.00	+/-0.00	0.0927	0.900	pCi/g	1					
Uranium-238		0.0924	+/-0.108	0.0924	0.900	pCi/g	1					
Rad Gamma Spec												
Gamma I129, solid												
Iodine-129	UJ-K	0.131	+/-0.102	0.223	1.00	pCi/g	1	SRB	03/14/00	1744	15174	5
Gammaspec, Gamma, solid												
Americium-241	UJ-K	0.00287	+/-0.0563	0.0999	4.00	pCi/g	1	SRB	03/09/00	1701	15150	6
Beryllium-7	U	-0.0504	+/-0.117	0.211	1.00	pCi/g	1					
Cesium-134	U	-0.0137	+/-0.0151	0.0215	0.100	pCi/g	1					
Cesium-137	UJ-K	0.000645	+/-0.0134	0.0247	2.30	pCi/g	1					
Cobalt-57	U	-0.000252	+/-0.00766	0.0144	0.100	pCi/g	1					
Cobalt-60	UJ-K	0.00464	+/-0.0129	0.0259	0.100	pCi/g	1					
Europium-152	U	-0.00324	+/-0.0394	0.0614	4.80	pCi/g	1					
Europium-154	UJ-K	-0.0199	+/-0.0468	0.070	17.0	pCi/g	1					
Europium-155	UJ-K	0.0408	+/-0.0334	0.0668	0.200	pCi/g	1					
Manganese-54	U	0.00987	+/-0.013	0.0256	0.100	pCi/g	1					
Radium-226		0.171	+/-0.0552	0.0431	1.00	pCi/g	1					
Sodium-22	UJ-	-0.00721	+/-0.0168	0.0252	0.700	pCi/g	1					

GENERAL ENGINEERING LABORATORIES

Meeting today's needs with a vision for tomorrow.

Certificate of Analysis

Company : Brookhaven National Laboratory
Address : OER
Building 51M
Upton, NY 11973-5000
Contact: Ms. Anna Bou
Project: Routine Analytical

Report Date: March 30, 2000

Client Sample ID: 065-006000215-30
Sample ID: 22131007

Project: BRKL00297
Client ID: BRKL001

Parameter	Qualifier	Result		DL	RL	Units	DF	Analyst	Date	Time	Batch	Method
Rad Gamma Spec												
Gammaspec, Gamma, solid												
Vanadium-48	UJ-K	-0.00228	+/-0.034	0.0645	1.00	pCi/g	1					
Zinc-65	UJ-K	-0.0269	+/-0.0309	0.0519	0.200	pCi/g	1					
Rad Gas Flow												
GFPC, Gross A/B, solid												
Alpha		3.13	+/-0.740	0.606	1.00	pCi/g	1	JDM	03/17/00	1907	13414	7
Beta		2.86	+/-1.21	1.93	1.00	pCi/g	1					
GFPC, Sr90, solid												
Strontium-90	UJ-K	-0.375	+/-1.63	4.30	7.50	pCi/g	1	AAK	03/09/00	1855	14213	8
Rad Liquid Scint												
LSC, Tritium Vacuum, solid												
Tritium	U	0.588	+/-1.12	1.92	2.00	pCi/g	1	AEA	03/14/00	0026	15504	9
Liquid Scint C14, solid												
Carbon-14	U	-0.0454	+/-0.123	0.217	1.00	pCi/g	1	KDA	03/16/00	1423	12078	10
Liquid Scint Ni63, solid												
Nickel-63	U	-0.977	+/-1.90	4.64	2.00	pCi/g	1	AEA	03/22/00	1044	14568	11
Liquid Scint Tc99, solid												
Technetium-99	U	-0.227	+/-0.455	1.18	5.00	pCi/g	1	AEA	03/13/00	1742	13514	12

The following Prep Methods were performed

Method	Description	Analyst	Date	Time	Prep Batch
Ash Soil Prep	Ash Soil Prep EPI A-021,A-021B,A-026	TC1	02/24/00	0952	13395
Dry Soil Prep	Dry Soil Prep EPI A-021,A-021B,A-026	CRS	02/23/00	1027	13128

The following Analytical Methods were performed

Method	Description
1	DOE EML HASL 300
2	DOE EML HASL 300
3	DOE EML HASL 300
4	DOE EML HASL 300
5	LANL EM-9
6	DOE EML HASL 300
7	EPA 900

P O Box 30712 • Charleston, SC 29417 • 2040 Savage Road • 29407
(843) 556-8171 • Fax (843) 766-1178

GENERAL ENGINEERING LABORATORIES

Meeting today's needs with a vision for tomorrow.

Certificate of Analysis

Company : Brookhaven National Laboratory
Address : OER
Building 51M
Upton, NY 11973-5000
Contact: Ms. Anna Bou
Project: Routine Analytical

Report Date: March 30, 2000

Client Sample ID: 065-006000215-30
Sample ID: 22131007

Project: BRKL00297
Client ID: BRKL001

Parameter	Qualifier	Result	DL	RL	Units	DF	AnalystDate	Time	Batch	Method
8	EPA 905.0									
9	EPA 906.0									
10	EPA 504.1									
11	DOE RESL Ni-1									
12	DOE EML HASL 300									

Notes:
The Qualifiers in this report are defined as follows :

DL Failed required detection limit.
RI Not quantified due to interference.
U Sample result < .5*MDA and MDA <= RDL.
UJ .5*MDA < Sample result < MDA and MDA <= RDL.
UJ-Q Not quantified due to low abundance.

The above sample is reported on an "as received" basis.

This data report has been prepared and reviewed in accordance with General Engineering Laboratories, Inc. standard operating procedures. Please direct any questions to your Project Manager, Nancy Slater at 843-556-8171 Ext. 4438.

Wanda C Jennes
Reviewed by

P O Box 30712 •Charleston, SC 29417 •2040 Savage Road •29407

GENERAL ENGINEERING LABORATORIES

Meeting today's needs with a vision for tomorrow.

Certificate of Analysis

Company : Brookhaven National Laboratory
Address : OER
Building 51M
Upton, NY 11973-5000
Contact: Ms. Anna Bou
Project: Routine Analytical

Report Date: March 30, 2000

Client Sample ID: 065-001000215-30
Sample ID: 22131008
Matrix: Soil
Collect Date: 15-FEB-00 10:12
Receive Date: 19-FEB-00 09:01
Collector: Client

Project: BRKL00297
Client ID: BRKL001

3/30/00 COC : 6361 3/30/00 wlt
3/30/00 wlt
3/30/00 wlt

Parameter	Qualifier	Result		DL	RL	Units	DF	Analyst	Date	Time	Batch	Method
Rad Alpha Spec												
Alphaspec Am241, Cm, solid												
Americium-241		0.0267	+/-0.0309	0.0267	1.00	pCi/g	1	CLC	03/13/00	1120	13936	1
Alphaspec Pu, solid												
Plutonium-238	UJ-K	0.0379	+/-0.117	0.273	6.60	pCi/g	1	CLC	03/13/00	1108	13928	2
Plutonium-239/240	UJ-K	0.000758	+/-0.042	0.143	4.00	pCi/g	1					
Alphaspec Th, solid												
Thorium-228	UJ	0.124	+/-0.0865	0.128	1.00	pCi/g	1	CLC	03/11/00	1913	13923	3
Thorium-230		0.155	+/-0.0768	0.0527	1.00	pCi/g	1					
Thorium-232		0.109	+/-0.0623	0.0251	1.00	pCi/g	1					
Alphaspec U, solid												
Uranium-233/234	UJ-K	0.0865	+/-0.127	0.238	0.900	pCi/g	1	CLC	03/09/00	2100	13912	4
Uranium-235/236	U	-0.00868	+/-0.0123	0.191	0.900	pCi/g	1					
Uranium-238	U	0.0317	+/-0.0728	0.166	0.900	pCi/g	1					
Rad Gamma Spec												
Gamma I129, solid												
Iodine-129	UJ-K	0.132	+/-0.282	0.225	1.00	pCi/g	1	SRB	03/15/00	1730	15174	5
Gammaspec, Gamma, solid												
Americium-241	UJ-K	0.00725	+/-0.0718	0.120	4.00	pCi/g	1	SRB	03/09/00	1701	15150	6
Beryllium-7	U	-0.0269	+/-0.117	0.217	1.00	pCi/g	1					
Cesium-134	U	-0.00818	+/-0.0135	0.0205	0.100	pCi/g	1					
Cesium-137		0.0285	+/-0.0189	0.0243	2.30	pCi/g	1					
Cobalt-57	U	0.00375	+/-0.00828	0.0161	0.100	pCi/g	1					
Cobalt-60	UJ-K	0.00613	+/-0.0177	0.0258	0.100	pCi/g	1					
Europium-152	U	-0.011	+/-0.0344	0.0601	4.80	pCi/g	1					
Europium-154	UJ-K	-0.00452	+/-0.0352	0.0664	17.0	pCi/g	1					
Europium-155	UJ-K	0.0381	+/-0.0584	0.0571	0.200	pCi/g	1					
Manganese-54	U	-0.00223	+/-0.0129	0.0232	0.100	pCi/g	1					
Radium-226		0.230	+/-0.0539	0.0398	1.00	pCi/g	1					
Sodium-22	UJ-K	-0.00154	+/-0.0127	0.0239	0.700	pCi/g	1					

P O Box 30712 •Charleston, SC 29417 •2040 Savage Road •29407
(843) 556-8171 •Fax (843) 766-1178

GENERAL ENGINEERING LABORATORIES

Meeting today's needs with a vision for tomorrow.

Certificate of Analysis

Company : Brookhaven National Laboratory
Address : OER
Building 51M
Upton, NY 11973-5000
Contact: Ms. Anna Bou
Project: Routine Analytical

Report Date: March 30, 2000

Client Sample ID: 065-001000215-30
Sample ID: 22131008

Project: BRKL00297
Client ID: BRKL001

Parameter	Qualifier	Result		DL	RL	Units	DF	Analyst	Date	Time	Batch	Method
Rad Gamma Spec												
Gammaspec, Gamma, solid												
Vanadium-48	UJ-K	-0.0119	+/-0.0355	0.0618	1.00	pCi/g	1					
Zinc-65	UJ-K	-0.0247	+/-0.0273	0.0427	0.200	pCi/g	1					
Rad Gas Flow												
GFPC, Gross A/B, solid												
Alpha		1.35	+/-0.614	0.821	1.00	pCi/g	1	JDM	03/17/00	1907	13414	7
Beta		2.87	+/-1.18	1.89	1.00	pCi/g	1					
GFPC, Sr90, solid												
Strontium-90	UJ-K	0.0132	+/-0.882	2.26	7.50	pCi/g	1	AAK	03/09/00	1855	14213	8
Rad Liquid Scint												
LSC, Tritium Vacuum, solid												
Tritium	U	-0.289	+/-1.05	1.88	2.00	pCi/g	1	AEA	03/14/00	0156	15504	9
Liquid Scint C14, solid												
Carbon-14		0.317	+/-0.141	0.224	1.00	pCi/g	1	KDA	03/16/00	1455	12078	10
Liquid Scint Ni63, solid												
Nickel-63	U	1.06	+/-2.07	5.05	2.00	pCi/g	1	AEA	03/21/00	1159	14568	11
Liquid Scint Tc99, solid												
Technetium-99	U	-0.0221	+/-0.434	1.07	5.00	pCi/g	1	AEA	03/13/00	1814	13514	12

The following Prep Methods were performed

Method	Description	Analyst	Date	Time	Prep Batch
Ash Soil Prep	Ash Soil Prep EPI A-021,A-021B,A-026	TC1	02/24/00	0952	13395
Dry Soil Prep	Dry Soil Prep EPI A-021,A-021B,A-026	CRS	02/23/00	1027	13128

The following Analytical Methods were performed

Method	Description
1	DOE EML HASL 300
2	DOE EML HASL 300
3	DOE EML HASL 300
4	DOE EML HASL 300
5	LANL EM-9
6	DOE EML HASL 300
7	EPA 900
8	EPA 905.0

P O Box 30712 • Charleston, SC 29417 • 2040 Savage Road • 29407
(843) 556-8171 • Fax (843) 766-1178

GENERAL ENGINEERING LABORATORIES

Meeting today's needs with a vision for tomorrow.

Certificate of Analysis

Company : Brookhaven National Laboratory
Address : OER
Building 51M
Upton, NY 11973-5000
Contact: Ms. Anna Bou
Project: Routine Analytical

Report Date: March 30, 2000

Client Sample ID: 065-001000215-30
Sample ID: 22131008

Project: BRKL00297
Client ID: BRKL001

Parameter	Qualifier	Result	DL	RL	Units	DF	AnalystDate	Time	Batch	Method
9	EPA 906.0									
10	EPA 504.1									
11	DOE RESL Ni-1									
12	DOE EML HASL 300									

Notes:
The Qualifiers in this report are defined as follows :

DL Failed required detection limit.
RI Not quantified due to interference.
U Sample result < .5*MDA and MDA <= RDL.
UJ .5*MDA < Sample result < MDA and MDA <= RDL.
UJ-Q Not quantified due to low abundance.

The above sample is reported on an "as received" basis.

This data report has been prepared and reviewed in accordance with General Engineering Laboratories, Inc. standard operating procedures. Please direct any questions to your Project Manager, Nancy Slater at 843-556-8171 Ext. 4438.

Wanda C Jennes
Reviewed by

P O Box 30712 •Charleston, SC 29417 •2040 Savage Road •29407
(843) 556-8171 •Fax (843) 766-1178

GENERAL ENGINEERING LABORATORIES

Meeting today's needs with a vision for tomorrow.

Certificate of Analysis

Company : Brookhaven National Laboratory
Address : OER
Building 51M
Upton, NY 11973-5000
Contact: Ms. Anna Bou
Project: Routine Analytical

Report Date: March 30, 2000

Client Sample ID: 065-002000215-30
Sample ID: 22131009
Matrix: Soil
Collect Date: 15-FEB-00 16:23 3/30/00 wct
Receive Date: 19-FEB-00 09:00 3/30/00 wct
Collector: Client

Project: BRKL00297
Client ID: BRKL001

COC: 6361 3/30/00 wct

Parameter	Qualifier	Result		DL	RL	Units	DF	Analyst	Date	Time	Batch	Method
Rad Alpha Spec												
Alphaspec Am241, Cm, solid												
Americium-241		0.0225	+/-0.0261	0.0225	1.00	pCi/g	1	CLC	03/13/00	1125	13936	1
Alphaspec Pu, solid												
Plutonium-238	UJ-K	-0.0233	+/-0.0213	0.157	6.60	pCi/g	1	CLC	03/13/00	1112	13928	2
Plutonium-239/240	UJ-K	0.0342	+/-0.0561	0.103	4.00	pCi/g	1					
Alphaspec Th, solid												
Thorium-228		0.172	+/-0.104	0.137	1.00	pCi/g	1	CLC	03/11/00	1913	13923	3
Thorium-230	UJ	0.114	+/-0.0829	0.116	1.00	pCi/g	1					
Thorium-232		0.0495	+/-0.0449	0.0297	1.00	pCi/g	1					
Alphaspec U, solid												
Uranium-233/234	UJ-K	0.125	+/-0.125	0.172	0.900	pCi/g	1	CLC	03/09/00	2100	13912	4
Uranium-235/236	U	0.0243	+/-0.0558	0.128	0.900	pCi/g	1					
Uranium-238	U	0.0452	+/-0.0791	0.160	0.900	pCi/g	1					
Rad Gamma Spec												
Gamma I129, solid												
Iodine-129	UJ-K	-0.0809	+/-0.280	0.251	1.00	pCi/g	1	SRB	03/15/00	2234	15174	5
Gammaspec, Gamma, solid												
Americium-241	UJ-K	0.00351	+/-0.0242	0.0405	4.00	pCi/g	1	SRB	03/09/00	1702	15150	6
Beryllium-7	U	0.0993	+/-0.187	0.313	1.00	pCi/g	1					
Cesium-134	U	0.00267	+/-0.0195	0.0308	0.100	pCi/g	1					
Cesium-137	UJ-K	-0.00148	+/-0.0202	0.0355	2.30	pCi/g	1					
Cobalt-57	U	-0.00317	+/-0.00919	0.0172	0.100	pCi/g	1					
Cobalt-60	UJ-K	-0.016	+/-0.0213	0.0347	0.100	pCi/g	1					
Europium-152	U	-0.00252	+/-0.0445	0.0774	4.80	pCi/g	1					
Europium-154	UJ-K	-0.0326	+/-0.0562	0.0939	17.0	pCi/g	1					
Europium-155	UJ-K	0.0153	+/-0.0356	0.0691	0.200	pCi/g	1					
Manganese-54	U	-0.00472	+/-0.0195	0.0351	0.100	pCi/g	1					
Radium-226		0.284	+/-0.0899	0.0636	1.00	pCi/g	1					
Sodium-22	UJ-	-0.0117	+/-0.0202	0.0338	0.700	pCi/g	1					

P O Box 30712 • Charleston, SC 29417 • 2040 Savage Road • 29407
(843) 556-8171 • Fax (843) 766-1178

GENERAL ENGINEERING LABORATORIES

Meeting today's needs with a vision for tomorrow.

Certificate of Analysis

Company : Brookhaven National Laboratory
Address : OER
Building 51M
Upton, NY 11973-5000
Contact: Ms. Anna Bou
Project: Routine Analytical

Report Date: March 30, 2000

Client Sample ID: 065-002000215-30
Sample ID: 22131009

Project: BRKL00297
Client ID: BRKL001

Parameter	Qualifier	Result		DL	RL	Units	DF	Analyst	Date	Time	Batch	Method
Rad Gamma Spec												
Gammaspec, Gamma, solid												
Vanadium-48	K UJ-K	-0.00856	+/-0.0503	0.0901	1.00	pCi/g	1					
Zinc-65	UJ-K	-0.04	+/-0.0531	0.0746	0.200	pCi/g	1					
Rad Gas Flow												
GFPC, Gross A/B, solid												
Alpha		1.41	+/-0.698	0.968	1.00	pCi/g	1	JDM	03/17/00	1938	13414	7
Beta		2.65	+/-1.11	1.76	1.00	pCi/g	1					
GFPC, Sr90, solid												
Strontium-90	UJ-K	-0.454	+/-1.04	2.14	7.50	pCi/g	1	AAK	03/14/00	2143	14213	8
Rad Liquid Scint												
LSC, Tritium Vacuum, solid												
Tritium	U	0.581	+/-1.11	1.89	2.00	pCi/g	1	AEA	03/14/00	0327	15504	9
Liquid Scint C14, solid												
Carbon-14	U	0.102	+/-0.128	0.216	1.00	pCi/g	1	KDA	03/16/00	1527	12078	10
Liquid Scint Ni63, solid												
Nickel-63	U	0.578	+/-2.05	4.99	2.00	pCi/g	1	AEA	03/21/00	1246	14568	11
Liquid Scint Tc99, solid												
Technetium-99	U	0.330	+/-0.425	0.958	5.00	pCi/g	1	AEA	03/13/00	1846	13514	12

The following Prep Methods were performed

Method	Description	Analyst	Date	Time	Prep Batch
Ash Soil Prep	Ash Soil Prep EPI A-021,A-021B,A-026	TCI	02/24/00	0952	13395
Dry Soil Prep	Dry Soil Prep EPI A-021,A-021B,A-026	CRS	02/23/00	1027	13128

The following Analytical Methods were performed

Method	Description
1	DOE EML HASL 300
2	DOE EML HASL 300
3	DOE EML HASL 300
4	DOE EML HASL 300
5	LANL EM-9
6	DOE EML HASL 300
7	EPA 900

P O Box 30712 • Charleston, SC 29417 • 2040 Savage Road • 29407
(843) 556-8171 • Fax (843) 766-1178

GENERAL ENGINEERING LABORATORIES

Meeting today's needs with a vision for tomorrow.

Certificate of Analysis

Company : Brookhaven National Laboratory
Address : OER
Building 51M
Upton, NY 11973-5000
Contact: Ms. Anna Bou
Project: Routine Analytical

Report Date: March 30, 2000

Client Sample ID: 065-002000215-30
Sample ID: 22131009

Project: BRKL00297
Client ID: BRKL001

Parameter	Qualifier	Result	DL	RL	Units	DF	AnalystDate	Time	Batch	Method
8	EPA 905.0									
9	EPA 906.0									
10	EPA 504.1									
11	DOE RESL Ni-1									
12	DOE EML HASL 300									

Notes:
The Qualifiers in this report are defined as follows :

DL Failed required detection limit.
RI Not quantified due to interference.
U Sample result < .5*MDA and MDA <= RDL.
UJ .5*MDA < Sample result < MDA and MDA <= RDL.
UJ-Q Not quantified due to low abundance.

The above sample is reported on an "as received" basis.

This data report has been prepared and reviewed in accordance with General Engineering Laboratories, Inc. standard operating procedures. Please direct any questions to your Project Manager, Nancy Slater at 843-556-8171 Ext. 4438.

Wanda C. Jennes
Reviewed by

P O Box 30712 • Charleston, SC 29417 • 2040 Savage Road • 29407
(843) 556-8171 • Fax (843) 766-1178

GENERAL ENGINEERING LABORATORIES

Meeting today's needs with a vision for tomorrow.

Certificate of Analysis

Company : Brookhaven National Laboratory
Address : OER
Building 51M
Upton, NY 11973-5000
Contact: Ms. Anna Bou
Project: Routine Analytical

Report Date: March 30, 2000

Client Sample ID: 065-003000215-30
Sample ID: 22131010
Matrix: Soil
Collect Date: 15-FEB-00 10:34 3/30/00 wcc
Receive Date: 19-FEB-00 09:00 3/30/00 wcc
Collector: Client

Project: BRKL00297
Client ID: BRKL001
COC: 3/30/00 wcc 6361

Parameter	Qualifier	Result		DL	RL	Units	DF	Analyst	Date	Time	Batch	Method
Rad Alpha Spec												
Alphaspec Am241, Cm, solid												
Americium-241		0.0514	+/-0.0423	0.0257	1.00	pCi/g	1	CLC	03/13/00	1125	13936	1
Alphaspec Pu, solid												
Plutonium-238	UJ-K	0.0467	+/-0.122	0.276	6.60	pCi/g	1	CLC	03/13/00	1112	13928	2
Plutonium-239/240	UJ-K	0.00518	+/-0.0502	0.146	4.00	pCi/g	1					
Alphaspec Th, solid												
Thorium-228	U	0.141	+/-0.155	0.283	1.00	pCi/g	1	CLC	03/13/00	1054	13923	3
Thorium-230		0.149	+/-0.117	0.0639	1.00	pCi/g	1					
Thorium-232		0.149	+/-0.117	0.0639	1.00	pCi/g	1					
Alphaspec U, solid												
Uranium-233/234		0.171	+/-0.138	0.149	0.900	pCi/g	1	CLC	03/09/00	2100	13912	4
Uranium-235/236	U	-0.00928	+/-0.0108	0.149	0.900	pCi/g	1					
Uranium-238	UJ	0.074	+/-0.0898	0.118	0.900	pCi/g	1					
Rad Gamma Spec												
Gamma I129, solid												
Iodine-129	UJ-K	0.0004	+/-0.151	0.207	1.00	pCi/g	1	SRB	03/16/00	1119	15174	5
Gammaspec, Gamma, solid												
Americium-241	UJ-K	0.00578	+/-0.123	0.151	4.00	pCi/g	1	SRB	03/09/00	1704	15150	6
Beryllium-7	U	0.00833	+/-0.231	0.430	1.00	pCi/g	1					
Cesium-134	UJ	0.0268	+/-0.0351	0.0437	0.100	pCi/g	1					
Cesium-137	UJ-K	0.0185	+/-0.0287	0.0489	2.30	pCi/g	1					
Cobalt-57	U	-0.00174	+/-0.0172	0.032	0.100	pCi/g	1					
Cobalt-60	UJ-K	-0.000917	+/-0.0293	0.0538	0.100	pCi/g	1					
Europium-152	U	-0.0718	+/-0.0652	0.114	4.80	pCi/g	1					
Europium-154	UJ-K	0.0194	+/-0.0654	0.128	17.0	pCi/g	1					
Europium-155	UJ-K	0.0613	+/-0.0693	0.134	0.200	pCi/g	1					
Manganese-54	U	0.00459	+/-0.0263	0.0482	0.100	pCi/g	1					
Radium-226		0.209	+/-0.101	0.086	1.00	pCi/g	1					
Sodium-22	UJ-K	0.00696	+/-0.0235	0.0461	0.700	pCi/g	1					

P O Box 30712 •Charleston, SC 29417 •2040 Savage Road •29407

GENERAL ENGINEERING LABORATORIES

Meeting today's needs with a vision for tomorrow.

Certificate of Analysis

Company : Brookhaven National Laboratory
Address : OER
Building 51M
Upton, NY 11973-5000
Contact: Ms. Anna Bou
Project: Routine Analytical

Report Date: March 30, 2000

Client Sample ID: 065-003000215-30
Sample ID: 22131010

Project: BRKL00297
Client ID: BRKL001

Parameter	Qualifier	Result		DL	RL	Units	DF	Analyst	Date	Time	Batch	Method
Rad Gamma Spec												
Gammaspec, Gamma, solid												
Vanadium-48	UJ-K	-0.0317	+/-0.0663	0.118	1.00	pCi/g	1					
Zinc-65	UJ-K	-0.00168	+/-0.0549	0.0888	0.200	pCi/g	1					
Rad Gas Flow												
GFPC, Gross A/B, solid												
Alpha		1.69	+/-0.777	1.09	1.00	pCi/g	1	JDM	03/17/00	1938	13414	7
Beta		2.20	+/-1.16	1.88	1.00	pCi/g	1					
GFPC, Sr90, solid												
Strontium-90	UJ-K	-0.175	+/-0.904	2.41	7.50	pCi/g	1	AAK	03/09/00	1855	14213	8
Rad Liquid Scint												
LSC, Tritium Vacuum, solid												
Tritium	U	0.295	+/-1.11	1.92	2.00	pCi/g	1	AEA	03/14/00	0458	15504	9
Liquid Scint C14, solid												
Carbon-14	U	0.037	+/-0.124	0.213	1.00	pCi/g	1	KDA	03/16/00	1559	12078	10
Liquid Scint Ni63, solid												
Nickel-63	U	0.792	+/-1.74	4.25	2.00	pCi/g	1	AEA	03/21/00	1333	14568	11
Liquid Scint Tc99, solid												
Technetium-99	U	-0.207	+/-0.365	0.951	5.00	pCi/g	1	AEA	03/13/00	1918	13514	12

The following Prep Methods were performed

Method	Description	Analyst	Date	Time	Prep Batch
Ash Soil Prep	Ash Soil Prep EPI A-021,A-021B,A-026	TC1	02/24/00	0952	13395
Dry Soil Prep	Dry Soil Prep EPI A-021,A-021B,A-026	CRS	02/23/00	1027	13128

The following Analytical Methods were performed

Method	Description
1	DOE EML HASL 300
2	DOE EML HASL 300
3	DOE EML HASL 300
4	DOE EML HASL 300
5	LANL EM-9
6	DOE EML HASL 300
7	EPA 900
8	EPA 905.0

GENERAL ENGINEERING LABORATORIES

Meeting today's needs with a vision for tomorrow.

Certificate of Analysis

Company : Brookhaven National Laboratory
Address : OER
Building 51M
Upton, NY 11973-5000
Contact: Ms. Anna Bou
Project: Routine Analytical

Report Date: March 30, 2000

Client Sample ID: 065-003000215-30
Sample ID: 22131010

Project: BRKL00297
Client ID: BRKL001

Parameter	Qualifier	Result	DL	RL	Units	DF	AnalystDate	Time	Batch	Method
9	EPA 906.0									
10	EPA 504.1									
11	DOE RESL Ni-1									
12	DOE EML HASL 300									

Notes:
The Qualifiers in this report are defined as follows :

DL Failed required detection limit.
RI Not quantified due to interference.
U Sample result < .5*MDA and MDA <= RDL.
UJ .5*MDA < Sample result < MDA and MDA <= RDL.
UJ-Q Not quantified due to low abundance.

The above sample is reported on an "as received" basis.

This data report has been prepared and reviewed in accordance with General Engineering Laboratories, Inc. standard operating procedures. Please direct any questions to your Project Manager, Nancy Slater at 843-556-8171 Ext. 4438.

Wanda C Jennes
Reviewed by

GENERAL ENGINEERING LABORATORIES

Meeting today's needs with a vision for tomorrow.

Certificate of Analysis

Company : Brookhaven National Laboratory
Address : OER
Building 51M
Upton, NY 11973-5000
Contact: Ms. Anna Bou
Project: Routine Analytical

Report Date: March 30, 2000

Client Sample ID: 065-004000215-30
Sample ID: 22131011
Matrix: Soil
Collect Date: 15-FEB-00 10:46 3/30/00 COC : 6361
Receive Date: 19-FEB-00 09:00 3/30/00
Collector: Client

Project: BRKL00297
Client ID: BRKL001

Parameter	Qualifier	Result		DL	RL	Units	DF	Analyst	Date	Time	Batch	Method
Rad Alpha Spec												
Alphaspec Am241, Cm, solid												
Americium-241	UJ	0.027	+/-0.0316	0.0476	1.00	pCi/g	1	CLC	03/13/00	1125	13936	1
Alphaspec Pu, solid												
Plutonium-238	UJ-K	0.0149	+/-0.0406	0.104	6.60	pCi/g	1	CLC	03/13/00	1112	13928	2
Plutonium-239/240	UJ-K	-0.00944	+/-0.0135	0.122	4.00	pCi/g	1					
Alphaspec Th, solid												
Thorium-228		0.741	+/-0.293	0.249	1.00	pCi/g	1	CLC	03/13/00	1054	13923	3
Thorium-230		0.412	+/-0.196	0.119	1.00	pCi/g	1					
Thorium-232		0.708	+/-0.268	0.0574	1.00	pCi/g	1					
Alphaspec U, solid												
Uranium-233/234		0.199	+/-0.156	0.133	0.900	pCi/g	1	CLC	03/09/00	2100	13912	4
Uranium-235/236	U	0.029	+/-0.0581	0.0869	0.900	pCi/g	1					
Uranium-238		0.318	+/-0.197	0.0867	0.900	pCi/g	1					
Rad Gamma Spec												
Gamma I129, solid												
Iodine-129	UJ-K	-0.0435	+/-0.170	0.222	1.00	pCi/g	1	SRB	03/16/00	1207	15174	5
Gammaspec, Gamma, solid												
Americium-241	UJ-K	-0.00803	+/-0.0173	0.0326	4.00	pCi/g	1	SRB	03/09/00	1704	15150	6
Beryllium-7	UJ	0.141	+/-0.128	0.246	1.00	pCi/g	1					
Cesium-134	U	-0.00701	+/-0.0138	0.0245	0.100	pCi/g	1					
Cesium-137	UJ-K	0.00394	+/-0.0336	0.0256	2.30	pCi/g	1					
Cobalt-57	U	0.00175	+/-0.00796	0.015	0.100	pCi/g	1					
Cobalt-60	UJ-K	0.00362	+/-0.0231	0.0291	0.100	pCi/g	1					
Europium-152	U	0.0269	+/-0.0344	0.0643	4.80	pCi/g	1					
Europium-154	UJ-K	0.00791	+/-0.0465	0.0763	17.0	pCi/g	1					
Europium-155	UJ-K	0.0179	+/-0.029	0.0557	0.200	pCi/g	1					
Manganese-54	U	0.00571	+/-0.0153	0.0222	0.100	pCi/g	1					
Radium-226		0.325	+/-0.071	0.0478	1.00	pCi/g	1					
Sodium-22	UJ-K	0.00263	+/-0.0167	0.0273	0.700	pCi/g	1					

P O Box 30712 • Charleston, SC 29417 • 2040 Savage Road • 29407

GENERAL ENGINEERING LABORATORIES

Meeting today's needs with a vision for tomorrow.

Certificate of Analysis

Company : Brookhaven National Laboratory
Address : OER
Building 51M
Upton, NY 11973-5000
Contact: Ms. Anna Bou
Project: Routine Analytical

Report Date: March 30, 2000

Client Sample ID: 065-004000215-30
Sample ID: 22131011

Project: BRKL00297
Client ID: BRKL001

Parameter	Qualifier	Result		DL	RL	Units	DF	Analyst	Date	Time	Batch	Method
Rad Gamma Spec												
Gammaspec, Gamma, solid												
Vanadium-48	UJ-K	0.0139	+/-0.0391	0.0739	1.00	pCi/g	1					
Zinc-65	UJ-K	0.0215	+/-0.032	0.0572	0.200	pCi/g	1					
Rad Gas Flow												
GFPC, Gross A/B, solid												
Alpha		2.31	+/-0.759	0.898	1.00	pCi/g	1	JDM	03/17/00	1938	13414	7
Beta		3.53	+/-1.09	1.67	1.00	pCi/g	1					
GFPC, Sr90, solid												
Strontium-90	UJ-K	-0.0199	+/-0.995	2.53	7.50	pCi/g	1	AAK	03/09/00	1855	14213	8
Rad Liquid Scint												
LSC, Tritium Vacuum, solid												
Tritium	UJ	1.42	+/-1.13	1.85	2.00	pCi/g	1	AEA	03/14/00	0629	15504	9
Liquid Scint C14, solid												
Carbon-14	U	0.048	+/-0.134	0.230	1.00	pCi/g	1	KDA	03/16/00	1631	12078	10
Liquid Scint Ni63, solid												
Nickel-63	U	-0.384	+/-1.75	4.28	2.00	pCi/g	1	AEA	03/21/00	1420	14568	11
Liquid Scint Tc99, solid												
Technetium-99	U	0.378	+/-0.391	0.864	5.00	pCi/g	1	AEA	03/13/00	1951	13514	12

The following Prep Methods were performed

Method	Description	Analyst	Date	Time	Prep Batch
Ash Soil Prep	Ash Soil Prep EPI A-021,A-021B,A-026	TC1	02/24/00	0952	13395
Dry Soil Prep	Dry Soil Prep EPI A-021,A-021B,A-026	CRS	02/23/00	1027	13128

The following Analytical Methods were performed

Method	Description
1	DOE EML HASL 300
2	DOE EML HASL 300
3	DOE EML HASL 300
4	DOE EML HASL 300
5	LANL EM-9
6	DOE EML HASL 300
7	EPA 900
8	EPA 905.0

P O Box 30712 •Charleston, SC 29417 •2040 Savage Road •29407

GENERAL ENGINEERING LABORATORIES

Meeting today's needs with a vision for tomorrow.

Certificate of Analysis

Company : Brookhaven National Laboratory
Address : OER
Building 51M
Upton, NY 11973-5000
Contact: Ms. Anna Bou
Project: Routine Analytical

Report Date: March 30, 2000

Client Sample ID: 065-004000215-30
Sample ID: 22131011

Project: BRKL00297
Client ID: BRKL001

Parameter	Qualifier	Result	DL	RL	Units	DF	AnalystDate	Time	Batch	Method
9	EPA 906.0									
10	EPA 504.1									
11	DOE RESL Ni-1									
12	DOE EML HASL 300									

Notes:
The Qualifiers in this report are defined as follows :

DL Failed required detection limit.
RI Not quantified due to interference.
U Sample result < .5*MDA and MDA <= RDL.
UJ .5*MDA < Sample result < MDA and MDA <= RDL.
UJ-Q Not quantified due to low abundance.

The above sample is reported on an "as received" basis.

This data report has been prepared and reviewed in accordance with General Engineering Laboratories, Inc. standard operating procedures. Please direct any questions to your Project Manager, Nancy Slater at 843-556-8171 Ext. 4438.

Wanda C Jennes
Reviewed by

P O Box 30712 •Charleston, SC 29417 •2040 Savage Road •29407
(843) 556-8171 •Fax (843) 766-1178